PN: 108588-01 REV. 11, 1/24

Save this manual for future reference.

INSTALLATION, OPERATION, AND MAINTENANCE MANUAL

1000-4000 MBH Hot Water Boiler

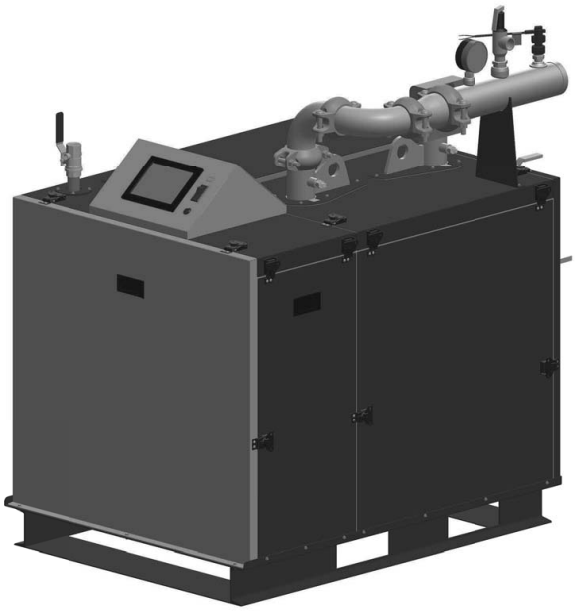

Heating Boiler Models		Hot Water Supply Boiler Models
AMP 1000	AMP 2500	AMPW 2500
AMP 1250	AMP 3000	AMPW 3000
AMP 1500	AMP 3500	AMPW 3500
AMP 2000	AMP 4000	AMPW 4000

⚠ WARNING

WARNING: If the information in these instructions is not followed exactly, a fire or explosion may result causing property damage, personal injury or death.

⚠ DANGER

Do not store or use gasoline or other flammable vapors and liquids in the vicinity of this or any other appliance.

WHAT TO DO IF YOU SMELL GAS

- **Do not try to light any appliance.**
- **Do not touch any electrical switch; do not use any phone in your building.**
- **Immediately call your gas supplier from a neighbor's phone. Follow the gas supplier's instructions.**
- **If you cannot reach your gas supplier, call the fire department.**

Installation and service must be performed by a qualified installer, service agency or the gas supplier.

Model:	Serial Number:
Installation Date:	System Type:
Heating Contractor:	Phone/Email:
Address:	

Thermal Solutions Products, LLC
Phone: 717-239-7642
1175 Manheim Pike, Lancaster, PA 17601
www.thermalsolutions.com
Email: orders@thermalsolutions.com

Table of Contents

I.	**Hazard Definitions**	**4**
II.	**Read Before Proceeding**	**5**
A.	Local Codes	5
B.	Warranty	5
C.	Shipment Damage	5
D.	Connecting Gas Supply Line	5
E.	Gas Leakage (If you detect or smell gas...)	5
F.	Maintenance	5
G.	Freeze Protection Fluids and Treatments	5
H.	Product Identification Label	6
I.	Factory Test and Inspections	6
J.	Disclaimers and Local Codes	6
III.	**Product Rating, Specifications, and Dimensional Data**	**7**
IV.	**Component Identification**	**10**
V.	**Unpacking From Shipping Pallet**	**13**
A.	Unpacking and Inspection	13
B.	Installation and Operation Manual	13
VI.	**Pre-Installation and Mounting**	**14**
A.	General Installation	14
B.	Appliance Mounting	15
C.	Clearances	16
D.	Clearances (French)	16
E.	Closet and Alcove installation	16
VII.	**Venting**	**17**
A.	General Venting Guidelines	17
B.	Venting Design Requirements	17
C.	Field Installation	18
D.	General Termination	21
E.	Vent and Combustion Air Terminations	26
F.	Multiple Appliance Terminations	28
G.	Terminal Installation	28
H.	Polypropylene Venting	30
I.	Optional Room Air for Combustion	30
J.	Removing Existing Appliance	33
K.	Special Installation Requirements for Massachusetts	34
VIII.	**Condensate Disposal**	**35**
A.	General	35
B.	Condensate Drain Assembly	35
C.	Condensate Neutralizer Installation	36
D.	Common Condensate pump/Sump	36
IX.	**Hydronic Piping**	**37**
A.	Boiler Piping	37
B.	General Piping Guidelines	37
C.	Factory Supplied Outlet Water Manifold	37
D.	Temperature Rise and Heat Exchanger Head Loss	38

Table of Contents

E. Standard Piping Components 39
F. Water Quality and Treatments 40
G. Oxygen Contamination 41
X. Heating Boiler Piping diagrams 43
XI. Hot Water Supply Boiler Water Piping 47
A. General Piping Guidelines 47
B. Factory Supplied Outlet Manifold (W) 47
C. Standard Piping Components 47
D. Scalding 48
E. Water Quality 49
F. Temperature Rise and Heat Exchanger Head Loss 50
G. Pump Selection 51
XII. Gas Piping 57
A. Guidelines and Requirements 57
XIII. Electrical 60
A. General 60
B. Power Requirements 60
C. Appliance Wiring 61
XIV. System Start-up 66
A. Check System Setup 66
B. Start the Boiler 66
C. Combustion Air/Fuel Adjustment 68
D. Field Conversion of Gas Type 69
E. Pump Control 70
F. Check Thermostat Operation 70
G. Adjust Supply Water Temperature 70
H. Testing of Controls and Safety Devices 70
XV. Service and Maintenance 71
A. General Maintenance 72
B. Monthly Inspection 72
C. Annual Inspections and Service 72
D. Restarting after Prolong Shutdown 75
E. Troubleshooting 75
APPENDIX A: Tables 76
APPENDIX B: Figures 77
APPENDIX C: Default Light-off and Modulation Rates 78
APPENDIX D: Dual Gas Models 79
A. Dual Gas: General 79
B. Connecting Gas Supply Line 79
C. Dual Gas Components 79
D. Gas Selection 79
E. Electrical Operation 79
F. Changing Gas Type During Operation 79

I. Hazard Definitions

The following terms are used throughout this manual to bring attention to the presence of hazards of various risk levels, or to important information concerning product life.
It is critical all personnel read and adhere to all information contained in DANGER, WARNING, and CAUTIONS. All DANGERS, WARNINGS, and CAUTIONS are for reference and guidance purpose, and, therefore, do not substitute for strict adherence to applicable jurisdictional and professional codes and regulations.

⚠ DANGER

Indicates an imminently hazardous situation which, if not avoided, will result in severe personal injury, death, or substantial property damage.

⚠ CAUTION

Indicates a potentially hazardous situation which, if not avoided, may result in moderate or minor personal injury, or property damage.

⚠ WARNING

Indicates a potentially hazardous situation which, if not avoided, could result in severe personal injury, death, or substantial property damage.

NOTICE

Indicates special instructions on installation, operation, or maintenance which are important but not related to personal injury hazards.

II. Read Before Proceeding

A. Local Codes

1. This unit shall be installed in accordance with those installation regulations enforced in the area where the installation is to be made. These regulations shall be carefully followed in all cases. Authorities having jurisdiction shall be consulted prior to installation.
2. This unit must be installed and serviced by a licensed electrician or certified gas supplier.
3. The City of New York requires a Licensed Master Plumber to supervise the installation of this product.
4. The Commonwealth of Massachusetts requires this product to be installed by a Licensed Plumber or Gas Fitter.

B. Warranty

1. This product has a limited warranty, a copy of which is shipped with the unit. It is the responsibility of the installing contractor to ensure all controls are correctly installed and are operating properly.
2. Factory warranty does not apply to units improperly installed or improperly operated.
3. Heat exchanger failure due to lime (scale) build-up in the heat exchanger is not covered under the manufacturer's warranty.
4. It is the responsibility of the customer to ensure water hardness levels and flow rate conforms to the requirements in this manual.

C. Shipment Damage

1. Upon receiving the unit, inspect for signs of shipping damages. If the unit has been hit or otherwise mishandled, immediately notify the carrier.
2. Verify total number of factory supplied items as per the packing slip with received parts.

D. Connecting Gas Supply Line

1. Connect supply gas line to the ground joint union inside the jacket of the appliance.

⚠ WARNING

Failure to prevent the gas line from turning could damage the gas train components on the appliance (gas valve, blower, etc.).

⚠ DANGER

This appliance MUST NOT be installed in any location where gasoline or flammable vapors are likely to be present or, in an environment that contains corrosive contaminants (see Table 4).
Do not block or restrict in any way the flow of combustion or ventilation air from or to the appliance.
Do not use this appliance if any part has been under water. Any appliance that has been under water must be replaced. Water damage to the unit can be extensive and present numerous safety hazards.

E. Gas Leakage (If you detect or smell gas...)

⚠ DANGER

1. Do not try to light any appliance.
2. Do not touch any electrical switch; do not use any phone in the building.
3. Immediately call your gas supplier from a neighbor's phone. Follow the gas supplier's instruction.
4. If you cannot reach your gas supplier, call the fire department.

F. Maintenance

1. To avoid electrical shock, ensure all electrical connections are disconnected before attempting installation or service of electrical components or connections.
2. Lockout all electrical boxes with padlock once power is turned off.
3. To prevent severe burns, allow the appliance to cool before performing maintenance.

G. Freeze Protection Fluids and Treatments

1. DO NOT USE automotive antifreeze. Specifically formulated propylene glycol solutions with inhibitors are recommended.
2. Do not use ethylene glycol in systems that can come in contact with domestic hot water, such as indirect water heaters.
3. See Glycol flow requirements in Table 25.
4. See the recommended treatments in Table 22 and Table 23.

H. Product Identification Label

1. A nameplate, in accordance with the ASME code Section IV, is permanently attached to the heat exchanger.
2. To access the nameplate, remove front jacket panel from the appliance.

I. Factory Test and Inspections

1. Prior to shipment, final air-fuel adjustments are performed by factory trained service personnel on each appliance. The factory emissions report is posted on the back of the front jacket panel as a reference for troubleshooting and maintenance.
2. In addition, the following tests and inspections are performed to ensure the appliance meets our highest safety and performance standards:

   Operating test
   Construction inspection
   Electrical components inspection
   Crating inspection.

J. Disclaimers and Local Codes

1. Installation must conform to the requirements of the authority having jurisdiction. In the absence of such requirements, installation must conform to the *National Fuel Gas Code, NFPA 54/ANSI Z223.1, and/ or CSA B149.1 Natural Gas and Propane Code*. Where required by the authority having jurisdiction, the installation must conform to the *Standard for Controls and Safety Devices for Automatically Fired Boilers, ANSI/ ASME CSD-1*.
2. Installation, start-up, and maintenance of this equipment can be hazardous and requires trained, qualified installers and service personnel. Do not install, operate, service or repair any components of this equipment unless you are qualified and fully understand all requirements and procedures.
3. This instruction manual is an integral part of the product and must be retained by the person in charge of the appliance operation, service, and maintenance.
4. This product burns gas to produce heat. The appliance must be properly installed, operated, and maintained to avoid exposure to appreciable levels of carbon monoxide and the installer is required to confirm that at least one carbon monoxide alarm is installed in the living space before the appliance is put into operation. It is important for the carbon monoxide alarms to be installed, maintained, and replaced following the alarm manufacturer's instructions and applicable local codes.

⚠ WARNING

This product can expose you to chemicals, including chromium, which are known to the state of California to cause cancer and birth defects or other reproductive harm. For more information go to: www.P65Warnings.ca.gov.

⚠ DANGER

Should overheating occur or the gas supply fail to shut off, turn off the manual gas control valve to the appliance.

III. Product Rating, Specifications, and Dimensional Data

AMP boilers are condensing, high-efficiency, gas-fired, hot water boilers designed for space heating systems or indirect domestic water heating, where supply water temperature does not exceed 190°F. These boilers have special coil type stainless steel heat exchangers, constructed, tested, and stamped per Section IV of the ASME Boiler and Pressure Vessel Code, which provide maximum heat transfer and simultaneous protection against flue gas product corrosion. These boilers are not designed for use in gravity hot water space heating systems or systems containing significant amount of dissolved oxygen (swimming pool water heating, direct domestic water heating, etc.).

This manual also covers the Hot Water Supply Boilers designed for heating potable water. (AMPW 2500, 3000, 3500, 4000) Information specific to the Dual Gas model can be found in the appendices.

Table 1: Performance Ratings

Commercial Gas Boiler						
Boiler Model	Input (MBH)		Gross Output (MBH)	Net Ratings Water[1] (MBH)	Thermal Efficiency (%)	Combustion Efficiency (%)
	Min.	Max.				
1000	200	1000	970	843	97	97
1250	250	1250	1213	1055	97	97
1500	300	1500	1455	1265	97	97
2000	400	2000	1940	1687	97	96.9
2500	500	2500	2425	2109	97	97
3000	600	3000	2910	2530	97	97
3500	700	3500	3395	2952	97	97
4000	800	4000	3880	3374	97	97

[1] Ratings shown are for installations at sea level and elevations up to 2000 ft. at minimum vent length. For high altitude installations above 2000 ft. consult factory.
Note: The hot water supply boilers (W Models) are rated for 98% thermal efficiency.

Table 2: Boiler Specifications

Specification	Boiler Models							
	1000	1250	1500	2000	2500	3000	3500	4000
Fuel	NG or LP	NG or LP	NG or LP	NG or LP	NG or LP	NG or LP	NG or LP	NG or LP
Max. Water Temp. (°F)[1]	210	210	210	210	210	210	210	210
Max. Working Pres. (psi)	160	160	160	160	160	160	160	160
Pressure Relief Valve Options (psi)[2]	30, 50, 60, 75, 100, 125, 150							
Water Vol. (gal)	12	12	13.9	17.2	36.4	36.4	47.1	47.1
Heat Transfer Area (sq. ft.)	100	100	120	153	300	300	403	403
Approx. Shipping Weight (lb)	922	922	1217	1217	2038	2038	2485	2485

[1] Appliance will go into hard lockout if temperature exceeds 200 ^{0}F.
[2] The standard relief valve pressure rating for all W models is 150 psi.

Table 3: Product Dimensions

Dimensions (in.)	Boiler Model							
	1000	**1250**	**1500**	**2000**	**2500**	**3000**	**3500**	**4000**
A	45-1/2	45-1/2	66-1/8	66-1/8	75-5/8	75-5/8	97-1/8	97-1/8
B	54	54	72-1/2	74-5/8	83-3/4	83-3/4	105-1/8	105-1/8
C	55-7/8	55-7/8	76-1/2	76-1/2	86-1/2	86-1/2	108	108
D	34-1/4	34-1/4	34-1/4	34-1/4	46	46	46	46
E	13-3/8	13-3/8	13-3/8	13-3/8	19-1/4	19-1/4	19-1/4	19-1/4
F	42-3/4	42-3/4	42-3/4	42-3/4	55	55	55	55
G	36-1/8	36-1/8	36-1/8	36-1/8	48-3/8	48-3/8	48-3/8	48-3/8
H	3	3	3-1/4	3-1/4	3	3	4	4
I	6-7/8	6-7/8	18-7/8	18-7/8	15-7/8	15-7/8	23-7/8	23-7/8
J	10-3/8	10-3/8	10-3/8	10-3/8	10-7/8	10-7/8	10-7/8	10-7/8
K	8-3/4	8-3/4	6-5/8	8-3/4	8-3/8	8-3/8	8-3/8	8-3/8
L	40-1/2	40-1/2	40-1/2	40-1/2	52-5/8	52-5/8	52-5/8	52-5/8
M	44-3/8	44-3/8	44-3/8	44-3/8	57-3/4	57-3/4	57-3/4	57-3/4
N	2-1/8	2-1/8	2-1/8	2-1/8	2-1/8	2-1/8	2-1/8	2-1/8
O	9-3/4	9-3/4	9-3/4	9-3/4	9-3/4	9-3/4	9-3/4	9-3/4
P	13-3/8	13-3/8	13-3/8	13-3/8	19-1/4	19-1/4	19-1/4	19-1/4
Q	6-1/8	6-1/8	6-1/8	6-1/8	7-1/8	7-1/8	9-1/8	9-1/8
R	11-1/8	11-1/8	11-1/8	11-1/8	11-1/8	11-1/8	13-1/8	13-1/8
S	23-1/4	23-1/4	23-1/4	23-1/4	29-3/4	29-3/4	29-3/4	29-3/4
T	32-1/8	32-1/8	32-1/8	32-1/8	42-3/8	42-3/8	42-3/8	42-3/8
Gas Inlet	1	1	1.25	1.25	1.5	1.5	2.0	2.0
Outlet Pipe	3	3	3	3	4	4	4	4
Inlet Pipe	2-1/2	2-1/2	2-1/2	2-1/2	4	4	4	4
Air Intake	8	8	8	8	10	10	12	12
Vent Outlet	8	8	8	8	10	10	12	12
Condensate Drain	1	1	1	1	1	1	1	1
Drain Line	3/4	3/4	3/4	3/4	3/4	3/4	3/4	3/4
X-COG	18-3/8	18-3/8	18-3/8	18-3/8	25-1/8	25-1/8	26-7/8	26-7/8
Y-COG	17-3/4	17-3/4	21-5/8	25-5/8	31-1/2	31-1/2	40-3/4	40-3/4
Z-COG	21	21	22-5/8	20-3/4	26-3/4	26-3/4	27-1/2	27-1/2

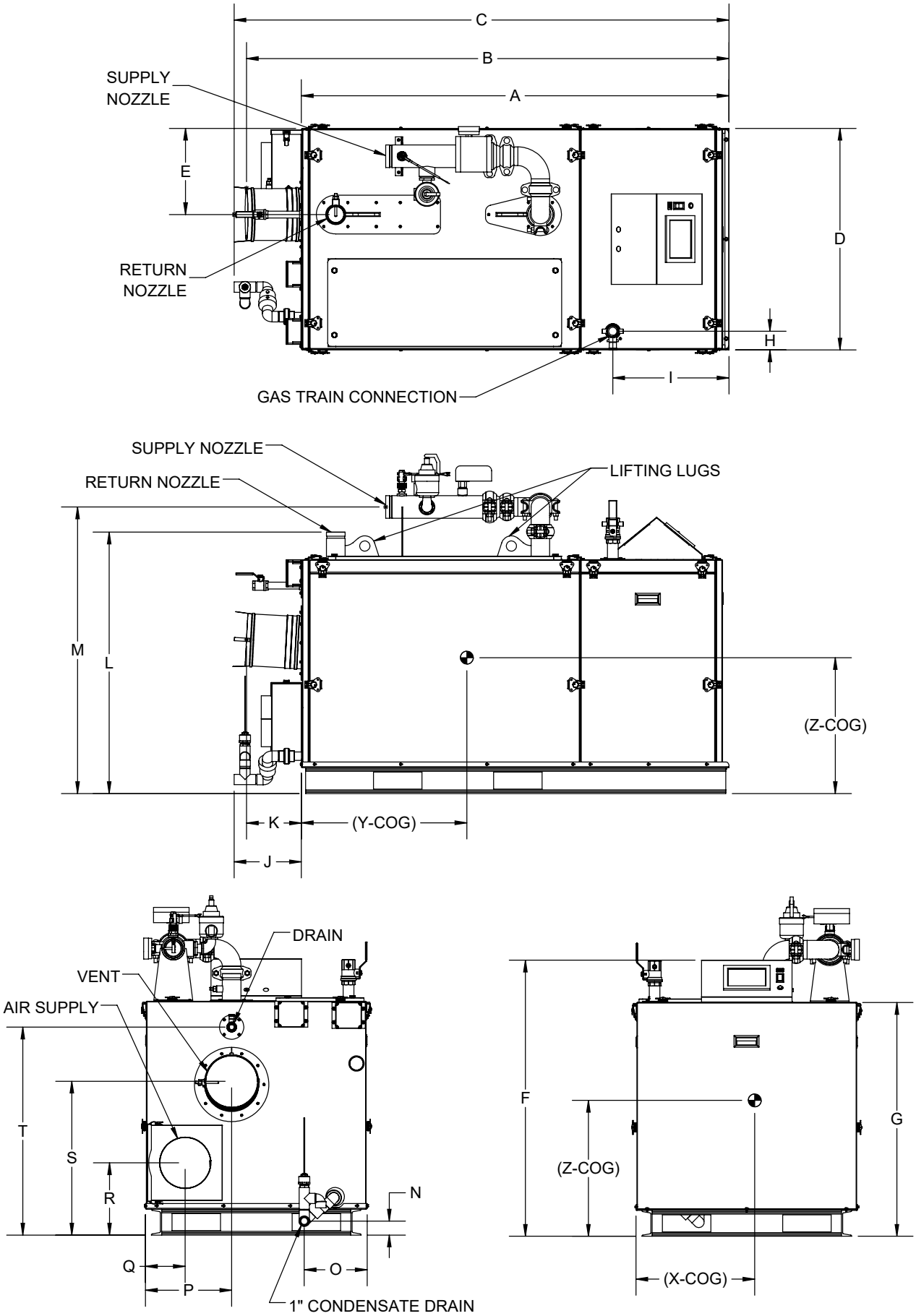

Figure 1: Boiler Dimensions

IV. Component Identification

1. **Communication Interface (Concert™ Boiler Control)**
   Provides easy access for viewing and adjusting operational parameters and alarms/lockouts, and monitoring historical performance characteristics.
2. **Main appliance control**
   It receives and processes input signals from safety switches and sensors to modulate the burner firing rate.
3. **Control box**
   The control box is designed to allow easy access to safety components and PCB boards for service and troubleshooting purposes.
4. **ON/OFF switch**
   Initiates or interrupts the power to the burner.
5. **Main gas valve**
   It regulates the flow of gas into the pre-mix burner by sensing negative pressure from the blower.
6. **Blower**
   The blower is designed for pre-mix application and delivers combustion air and gas to the burner at a desired ratio over the modulation range.
7. **Bluejet® burner**
   The high efficiency, low NOx Bluejet® Burner is mounted on the burner door with eight M4 x 10 screws.
8. **Ignition electrode**
   The ionization electrode provides electrical spark for ignition. The igniter assembly is installed on the burner door with two M4 x 10 screws.
9. **Flame observation port**
   A ¾ inch diameter quartz sight glass provides a means of visual inspection of the burner flame condition.
10. **Thermal fuse**
    If the temperature at the burner door reaches over 320 ^{0}F, the thermal fuse will interrupt power to the burner. Used to detect dangerous flame blow back and burner door insulation failure.
11. **High gas pressure switch**
    The high gas pressure switch monitors supply gas pressure and shuts off the electrical control circuit when pressure rises above the setpoint (see Table 35).
12. **Low gas pressure switch**
    The low gas pressure switch monitors supply gas pressure and shuts off the electrical control circuit in the event a low gas pressure condition occurs (see Table 35).
13. **Outlet/Supply water connection**
    Outlet manifold with a Victaulic grooved connection that delivers hot water to the system. Refer to Table 3 for model specific water pipe connection sizes.
14. **Water flow switch**
    In the event of insufficient water flow, the appliance will be shut down by the action of the flow switch. Refer to Table 24 and for absolute allowable water flow rates.
15. **Gas supply line**
    Provides a means of connection for incoming gas line to the gas train assembly. See Table 35 for model specific pipe sizes.
16. **Inlet/Return water connection**
    Inlet connection that returns water from the system to the boiler. Refer to Table 3 for model specific pipe connection sizes.
17. **Supply/outlet water temperature sensor**
    Dual element temperature sensor for high limit and modulation control.
18. **Return/Inlet water temperature sensor**
    Used for monitoring the inlet water temperature and temperature rise.
19. **Low water cut off probe and reset box**
    The unit comes with an integrated Low Water Cut Off (LWCO) probe and rest box. The LWCO safeguards the heat exchanger from inadequate water level. The LWCO has a manual reset button.
20. **Temperature and pressure gauge**
    Provides real time outlet water temperature and pressure readings.
21. **Pressure relief valve**
    Protects the heat exchanger from an over pressure condition. Refer to Table 2 for relief valve size options.
22. **Condensate drain trap**
    Serves to discharge condensate from the heat exchanger while preventing flue gases from escaping through the drain line.
23. **Minimum combustion air proving switch**
    Ensures adequate combustion air is supplied to the combustion chamber for stable and complete ignition.
24. **Blocked vent switch**
    The blocked vent switch interrupts the control circuit when there is a vent blockage or significant restriction of vent piping.
25. **Combustion air filter box**
    Provides a combustion air connection for direct vent installation, and houses the air filter.
26. **Exhaust vent connection**
    The vent pipe conveys combustion products to a safe point of discharge. The unit is equipped standard with a stainless steel vent connection. Refer to Table 6 for model specific vent connection sizes.
27. **Heat exchanger**
    316L Stainless Steel, Condensing, water tube type heat exchanger.

IV. Component Identification (continued)

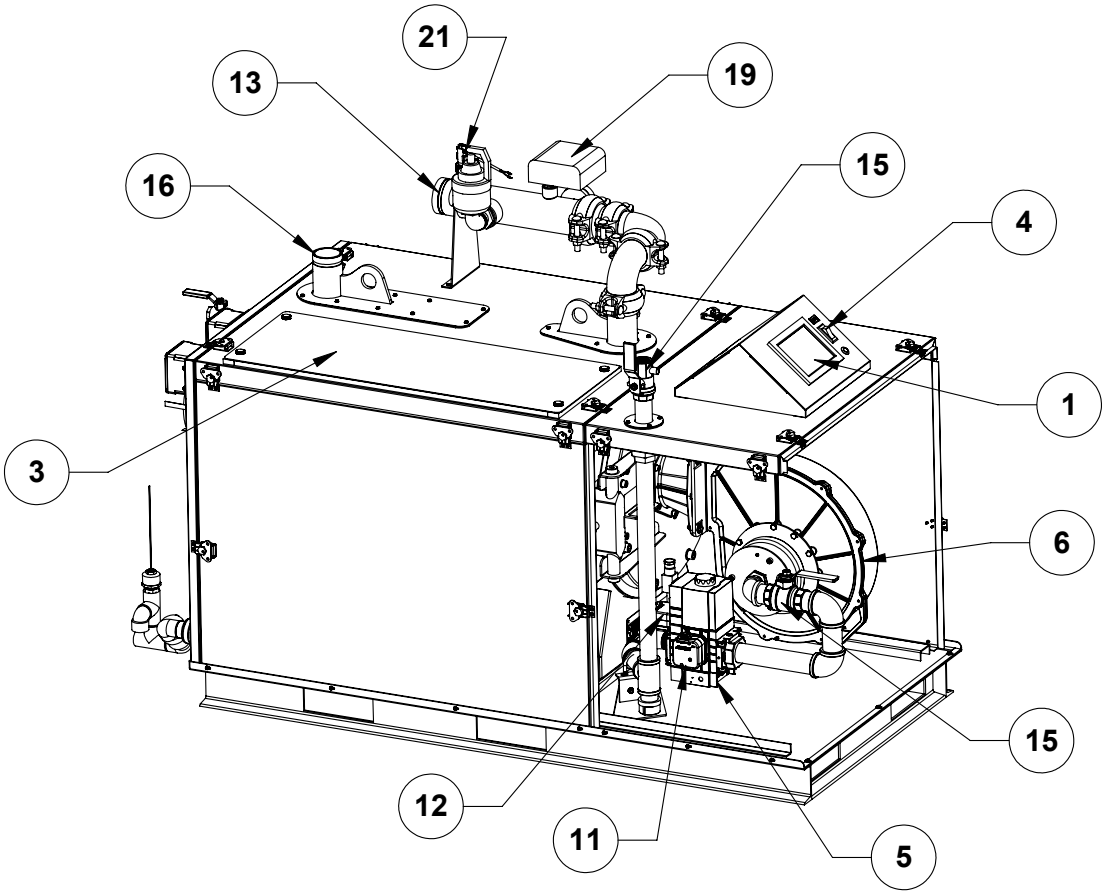

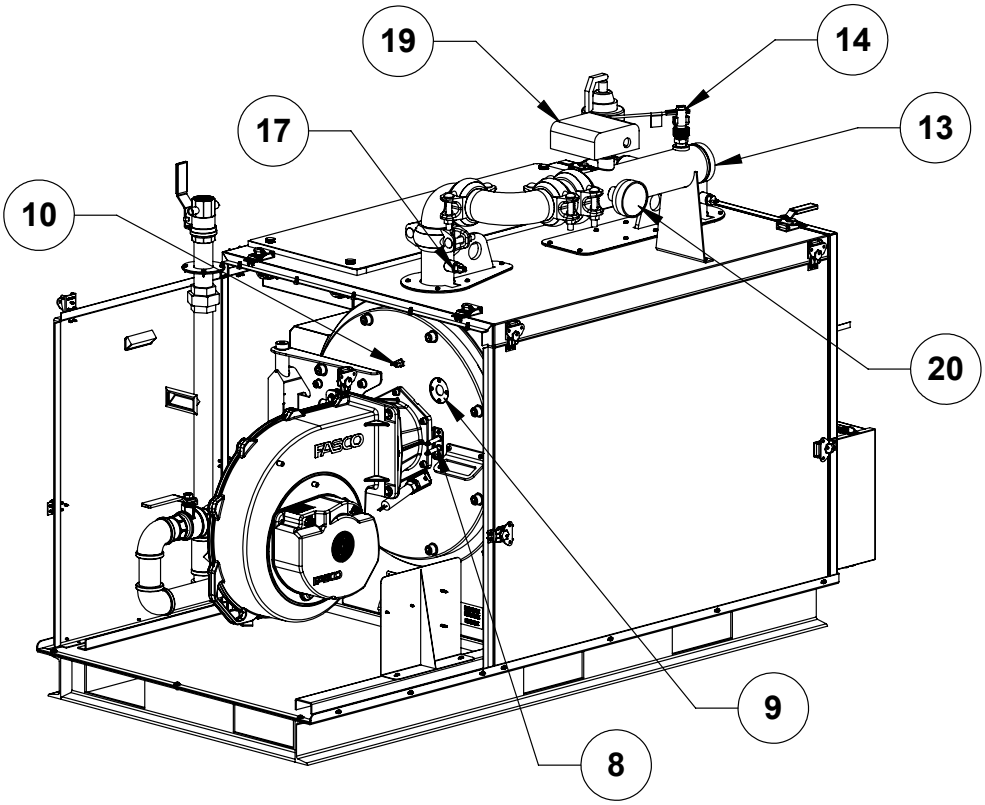

Figure 2: Component Identification

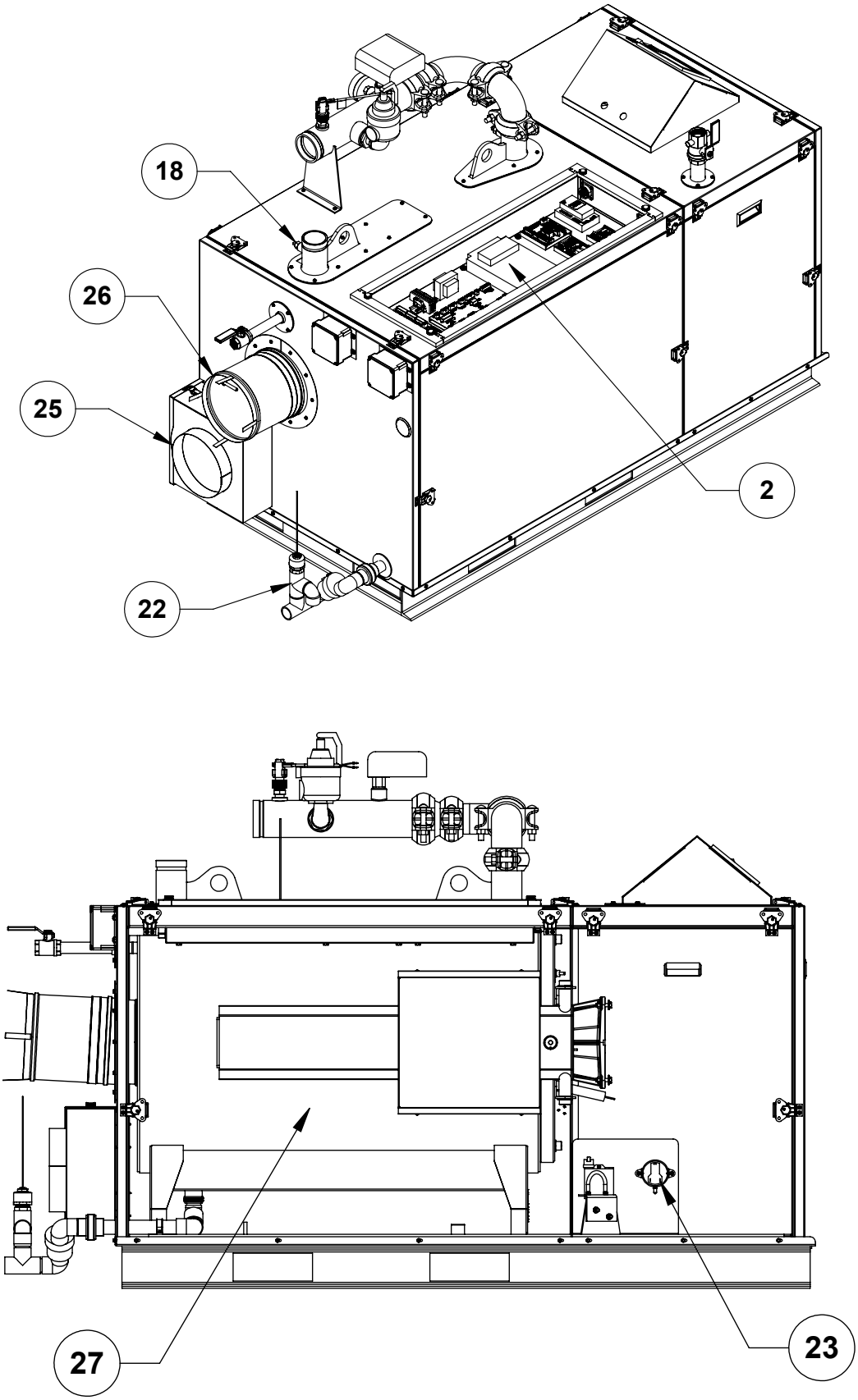

Figure 3: Component Identification

V. Unpacking From Shipping Pallet

A. Unpacking and Inspection

1. Move appliance to approximate installation location.
2. Remove all crate fasteners.
3. Unwrap and remove protective packaging.
4. Account for all loose shipped items.
5. Remove lag screws securing base to the pallet.
6. The appliance can be moved to its permanent location via a fork lift or an overhead crane.
7. For crane attachment, the lifting lugs are located next to the inlet/outlet water connections.
8. The appliance can be lifted from the base using a fork lift inserted into the side, front, or rear.

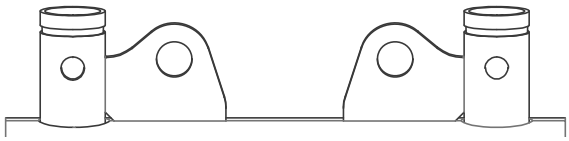

Figure 4: Lifting Lugs

9. Check for signs of shipment damage.
10. Pay particular attention to parts accompanying the appliance which may show sign of being hit or otherwise mishandled.
11. Verify total number of pieces shown on packing slip with those actually received. In case there is damage or a shortage, immediately notify the carrier.

B. Installation and Operation Manual

1. The instruction manual enclosed with the unit is an integral part of the product and must be retained by the person in charge of the appliance. Please read the instructions contained in this manual carefully as they provide important information regarding the safe installation, use and servicing of this appliance.
2. Check for other items that shipped loose with the appliance.

⚠ WARNING

Failure to assure the lifting forks are long enough to extend at least half way through the base will result in the appliance tipping and potentially falling. This could result in personal injury, death, or substantial property damage.
Do not operate this appliance if any part has been underwater. The possible damage to a flooded appliance can be extensive and present numerous safety hazards. Any appliance that has been underwater must be replaced.

NOTICE

Do not drop, bump, or lean an object against the appliance. This could damaging the heat exchanger or other critical components.

VI. Pre-Installation and Mounting

A. General Installation

1. Installation must conform to the requirements of the authority having jurisdiction or, in the absence of such requirements, to the *National Fuel Gas Code, ANSI Z223.1/NFPA 54, and/or Natural Gas and Propane Installation Code, CAN/CSA B149.1.* Where required by the authority having jurisdiction, the installation must conform to the *Standard for Controls and Safety Devices for Automatically Fired Boilers, ANSI/ASME CSD-1.*
2. Provide clearance between appliance jacket panels and combustible material in accordance with local fire ordinance. Refer to Table 5 for recommended service clearances. Recommended service clearances may be reduced but should not be less than the clearance to combustibles.
3. Protect gas ignition system components from water (dripping, spraying, rain, etc.) during operation and service (circulator replacement, condensate trap, control replacement, etc.).
4. Provide combustion and ventilation air in accordance with applicable provisions of local building codes, or: USA - National Fuel Gas Code, ANSI Z223.1/NFPA 54, Air for Combustion and Ventilation; Canada - Natural Gas and Propane Installation Code, CAN/CSA-B149.1, Venting Systems and Air Supply for Appliances.
5. The appliance should be located so as to minimize the length of the vent system. Ensure air intake pipe termination is away from areas that may contaminate the combustion air (see Table 4). In particular, avoid areas near chemical products containing chlorines, chlorofluorocarbons, paint removers, cleaning solvents, and detergents. Avoid areas containing saw dust, loose insulation fibers, dry wall dust etc.
6. This appliance must not be installed in a room under negative pressure. An equipment room under negative pressure conditions could deplete the combustion air supply to the appliance and cause leakage of flue gas from the venting system.
   a. Direct vent installation is not complete without screwing down the front door for a proper seal of the combustion air system.

⚠ WARNING

Apply supplied silicone lubricant to the gasket inside the vent connector. Failure to apply lubricant could result in flue gas leaks or gasket deterioration.

Adequate combustion and ventilation air must be provided to assure proper combustion. Install combustion air intake using the methods in this manual.

Installation of this appliance should be undertaken only by trained and skilled personnel from a qualified service agency. Follow these instructions exactly. Improper installation, adjustment, service, or maintenance can cause personal injury, death, or substantial property damage.

Do not change or modify any accessories or parts or jump-out any safety limit devices.

⚠ DANGER

This appliance includes a combustion air filter. Ensure filter is installed at all times of operation. Inspect and clean filter according to the maintenance section of this manual.

Avoid operating this appliance in an environment where sawdust, loose insulation fibers, dry wall dust, etc. are present. If operated under these conditions, The burner must be inspected for clogged ports, and replaced if needed.

NOTICE

Due to the low water content of the appliance, mis-sizing with regard to the heating or hot water system load will result in excessive cycling and accelerated component failure.

The manufacturer DOES NOT warrant failures caused by mis-sized appliance applications. DO NOT oversize the appliance to the system. Multiple unit installations greatly reduce the likelihood of oversizing.

Ensure all labels on the product are fully visible at all times for the purpose of maintenance and inspections.

The installer must verify that at least one carbon monoxide alarm has been installed within a residential living space or home following the alarm manufacturer's instructions and applicable local codes before putting the appliance into operation.

B. Appliance Mounting

1. These boilers are intended for installation in an area with a floor drain, or in a suitable drain pan to prevent any leaks or pressure relief valve discharge resulting in property damage.
2. This appliance is not intended to support external piping or venting. All external piping and venting must be supported independently of the appliance.
3. This appliance must be installed on a level surface to prevent condensate from backing up inside the heat exchanger.
4. Provide adequate space for condensate piping, condensate pump, or neutralizer kit.
5. An elevated base/pad is required when the floor is not level or in areas where water could accumulate around the appliance. The base must be able to support the weight of the appliance, water, and all additional system components.
   a. This appliance is listed for installation on combustible flooring. Acceptable flooring includes a level metal or wooden base capable of holding the weight of the appliance, water, and additional components. The base shall extend beyond the edges of the appliance by at least 3 inches (76.2 mm) in any direction. Never install directly on carpeted flooring.
   b. For closet or alcove installation, the base shall cover the entire floor of the closet/alcove.

⚠ CAUTION

For installation and operation only in climates where the ambient temperature will not be less than 32 °F (0 °C). Do not install in climates where condensate can freeze.

Appliance must be protected from standing water. Install on a level platform.

Do not install this appliance under an overhang less than 3 feet from its top. The area under the overhang must be open on 3 sides.

Never install directly on carpeted flooring.

Table 4: Corrosive Combustion Air Contaminants

Contaminants to Avoid:
Spray cans containing chlorofluorocarbons (CFC's)
Permanent wave solutions
Chlorinated waxes/cleaners
Chlorine-based swimming pool chemicals
Calcium chloride used for thawing
Sodium chloride used for water softening
Refrigerant leaks
Paint or varnish removers
Hydrochloric acid/muriatic acid
Cements and glues
Anti-static fabric softeners used in clothes dryers
Chlorine-type bleaches, detergents, and cleaning solvents found in household laundry rooms.
Adhesives used to fasten building products and other similar products
Excessive dust and dirt
Areas likely to have contaminants:
Dry cleaning/laundry areas and establishments
Swimming pools
Metal fabrication plants
Beauty shops
Refrigeration repair shops
Photo processing plants
Auto body shops
Plastic manufacturing plants
Furniture refinishing areas and establishments
New building construction
Remodeling areas
Garages with workshops

C. Clearances

1. This appliance is listed for 0" clearance to combustible materials. The clearances for serviceability are found in Table 5.
2. Minimum clearances from combustible or noncombustible construction, 0" sides, 0" back, 0" top.
3. It is the installers responsibility to provide enough clearance for servicing the appliance in the installed location.

D. Clearances (French)

1. Dégagements minimaux à assurer entre les parois de l'appareil et les constructions combustibles ou incombustibles : 0 po (côtés), 0 po (arrière) et 0 po (dessus).
2. Installation dans une garde-robe : assurer un dégagement de 24 po devant l'appareil.

E. Closet and Alcove installation

1. Include ventilation air openings in closet installations.
2. Provide a 1" minimum clearance around water pipes.
3. Follow vent material manufacturer's instructions for vent clearances.
4. Clearances for closet or alcove Installation:

   Front - 48"

   Sides - 36"

   Rear - 22"

   Top - 20"

NOTICE

This appliance is approved for zero inch clearance to combustible or noncombustible material, but installing the appliance with smaller than the clearances for serviceability will limit access for maintenance.

Consult local codes and inspectors before installing multiple appliances adjacent to each other with zero clearance.

⚠ WARNING

Closet and alcove installation can cause elevated temperatures. Follow the required clearances and use only stainless steel, CPVC, or polypropylene vent material.

Include ventilation air openings in closet installations.

Do not install directly on carpeted flooring.

Table 5: Clearances for Serviceability

Model	Front (In.)	Rear (In.)	Right (In.)	Left (In.)	Top (In.)
1000	20	22	6	24	20
1250	20	22	6	24	20
1500	24	22	6	24	20
2000	24	22	6	24	20
2500	36	22	6	36	25
3000	36	22	6	36	25
3500	48	22	6	36	30
4000	48	22	6	36	30

VII. Venting

A. General Venting Guidelines

1. Install vent system in accordance with N*ational Fuel Gas Code, ANSI Z223.1/NFPA 54* or Natural Gas and Propane Installation Code, CAN/CSA B149.1 Installation Code for Canada, or, applicable provisions of local building codes.
2. This is listed as a direct vent appliance but can also be used with indoor air for combustion.
   a. Screw down the front door to the base for proper sealing of the combustion air system. This appliance relies on a sealed jacket for direct vent installations.
3. Vent/combustion system materials that are listed for use with this appliance are listed in Table 10. Venting manufacturers not listed in this manual may be acceptable. It is the responsibility of the installer or vent supplier to use compatible adapters and materials.
   a. It is recommended to consult with venting professionals and designers when determining the vent system for this appliance.
4. Enclose vent passing through occupied or unoccupied spaces above the appliance with material having a fire resistance rating at least equal to the rating of adjoining floor or ceiling.
5. For flue gas venting, have horizontal runs sloping upwards not less than ¼ inch per foot (21 mm/m) from the boiler to the vent terminal.
6. This appliance operates under conditions that permit condensation in the heat exchanger and the flue gas venting. This appliance shall be installed so as to prevent accumulation of condensate, and where necessary, have means provided for drainage of condensate.
7. If possible, slope horizontal combustion air pipe minimum 1/4 in/ft (21 mm/m) downward towards terminal. If not, slope towards the appliance.
8. It is recommended that a Carbon Monoxide detector be installed and interlocked to the appliance. Consult your local jurisdiction for additional requirements.

B. Venting Design Requirements

At the discretion of the installing contractor, the venting system can be designed by consulting with listed venting engineers or by using the equivalent length method in this manual.

1. Engineered Venting Method

(Recommended Method) Using the operating characteristics and required conditions, an individual or common venting system can be designed to ensure the reliability of the appliance(s).

⚠ WARNING

This appliance must not be installed in a room under negative pressure. These direct vent gas fired appliances are allowed a maximum leakage of 2% from the venting/combustion chamber and 8% from the air inlet portion when pressurized to operating conditions in a neutral pressure room. An equipment room under negative pressure could deplete the combustion air supply to the appliance and cause leakage of flue gas from the venting system.

Exhaust fans installed in equipment rooms can create negative pressure conditions strong enough to cause nuisance shutdowns of the appliance.

The front door panel must be screwed down during operation for proper filtration of combustion air.

NOTICE

Common venting with other manufacturers' appliances or different models is prohibited.

It is the Responsibility of the installing contractor or venting designers to comply with national and local codes and follow best industry practices for installing vent support, drainage, and pitch.
Do not exceed maximum vent/combustion air system length.

a. Flue gas temperatures and flow rates can be found in Table 9.
b. The combustion CO_2 and O_2 ranges are shown in Table 38.
c. The pressure at the flue outlet of the appliance at any given firing rate must be within the range of negative 0.25" W.C. to positive 0.5" W.C.
d. The pressure at the intake of the appliance at any given firing rate must be within the range of 0.0" WC to positive 0.1" WC.
e. **Manifolded venting** without backflow prevention can allow flue gas from one appliance to interact with the other appliances in the system. Common venting systems must be designed with backflow protection.

2. Equivalent length method: Do not exceed maximum vent/combustion air lengths listed in Table 6. Equivalent lengths of fittings are given in Table 7.

C. Field Installation

1. A factory installed cast aluminum or steel ring provides a means for air intake connection.
2. A factory installed vent connector provides a means for connection to stainless steel venting.
3. Vent and combustion air intake pipe must be supported to allow uniform flow of combustion air and flue gas.
4. Plan venting system to avoid possible contact with plumbing or electrical wires. Start at the vent connector and work towards the vent termination.
5. Design the air intake system to allow 3/8" (9.5mm) of thermal expansion per 10 ft. (3m) of CPVC/PVC pipe. Runs of 20 ft. (6.1m) or longer that are restrained at both ends must have an offset.
   a. PVC combustion air pipe joints must be cleaned with primer and glued with cement. Follow all manufacturer instructions and drawings when preparing pipe ends for joining and using the primer and the cement.
6. Size and cut wall opening such that a minimal clearance is obtained and to allow easy insertion of vent pipe.

⚠ WARNING

Failure to follow these instructions could cause products of combustion to enter the building, resulting in severe personal injury, death, or substantial property damage.

Use CPVC vent components within any interior space where air cannot circulate freely, including through vertical or horizontal chase ways, inside a stud wall, in closets, and through wall penetrations.

The use of cellular core PVC (ASTM F891), cellular core CPVC or Radel (polyphenolsulfone) is prohibited.

All condensate that forms in the vent must be able to drain back to the heat exchanger.

Table 6: Vent and Combustion Air Pipe Diameters and Maximum Lengths

Model	Combustion Air Length			Vent Length		
	Pipe Dia. in. (mm)	Minimum ft. (m)	Maximum ft. (m)	Pipe Dia. in. (mm)	Minimum ft. (m)	Maximum ft. (m)
1000	8 (200)	0	150 (45.7)	8 (200)	3 (0.9)	150 (45.7)
	6 (160)	0	70 (21.3)	6 (160)	3 (0.9)	70 (21.3)
1250	8 (200)	0	150 (45.7)	8 (200)	3 (0.9)	150 (45.7)
	6 (160)	0	50 (15.2)	6 (160)	3 (0.9)	50 (15.2)
1500	8 (200)	0	150 (45.7)	8 (200)	3 (0.9)	150 (45.7)
	6 (160)	0	50 (15.2)	6 (160)	3 (0.9)	50 (15.2)
2000	8 (200)	0	100 (30.5)	8 (200)	3 (0.9)	100 (30.5)
2500	10 (250)	0	150 (45.7)	10 (250)	3 (0.9)	150 (45.7)
3000	10 (250)	0	150 (45.7)	10 (250)	3 (0.9)	150 (45.7)
3500	12 (315)	0	150 (45.7)	12 (315)	3 (0.9)	150 (45.7)
4000	12 (315)	0	150 (45.7)	12 (315)	3 (0.9)	150 (45.7)

NOTE:
Contact factory for assistance on maximum vent length applications.
This table applies to all listed vent/combustion air system options.

Table 7: Equivalent lengths of Vent and Combustion Air Components

Diameter	6 in. (160 mm)	8 in. (200 mm)	10 in. (250 mm)	12 in. (315 mm)
90° Elbow	7 ft. (2.1 m)	9 ft. (2.7 m)	11 ft. (3.4 m)	13 ft. (4.0 m)
45° Elbow	5 ft. (1.5 m)	7 ft. (2.1 m)	9 ft. (2.7 m)	10 ft. (3.0 m)

Table 8: Vent and Combustion Air Equivalent Length Calculation Worksheet

Component	Combustion Air						Vent					
	Equivalent Length Per Piece	x	Quantity	=	Subtotal Equivalent Length		Equivalent Length Per Piece	x	Quantity	=	Subtotal Equivalent Length	
Straight Pipe		x		=		A		x		=		D
90° Elbow		x		=		B		x		=		E
45° Elbow		x		=		C		x		=		F
	Combustion Air Total Equivalent Length			=			Vent Total Equivalent Length			=		

Notes:
1. Total equivalent length cannot exceed maximum equivalent length shown in Table 6.
2. Combustion air and vent terminations do not count towards total equivalent length.

Table 9: Flue Gas and Combustion Air Flow Rates

		At Maximum Input Rate		At Minimum Input Rate	
Model	Vent Dia. (In.)	Flue Gas Flow, ACFM @ 35% Excess Air, 180 ^{0}F	Combustion Air, SCFM @ 35% Excess Air, 60 ^{0}F	Flue Gas Flow, ACFM @ 35% Excess Air, 180 ^{0}F	Combustion Air, SCFM @ 35% Excess Air, 60 ^{0}F
1000	8	282	212	56	42
1250		352	265	70	53
1500		423	318	84	63
2000		564	424	113	85
2500	10	705	531	141	106
3000		846	637	169	127
3500	12	987	743	197	148
4000		1129	849	225	170

Note: Flow rates are based on the combustion of natural gas.

Table 10: Listed Vent Manufacturers and Materials

Make	Material	Model
Heat Fab	Stainless Steel	Saf-T Vent EZ Seal*
Z-Flex (Nova Flex Group)	Stainless Steel/ Polypropylene	Z-Vent/Z-DENS
DuraVent	Polypropylene	PolyPro Single Wall Rigid
Centrotherm	Polypropylene	InnoFlue SW Rigid

*Factory supplied flue connection. Adapters are required to transition to alternate vent materials or manufacturers.

Table 11: Stainless Steel and CPVC Vent Adapters

	Stainless Steel to CPVC	Heat Fab to Z-Vent
Vent Diameter (in.)	**Part #**	**Z-Flex Part #**
8	109510-01	2SVSHF08
10	109510-02	2SVSHF10
12	109510-03	2SVSHF12

Table 12: Polypropylene Vent Adapters

Model	Vent Diameter (in.)	Centrotherm Part # (Innoflue PP System)	Z-Flex Part # (Z-DENS PP Systems)
1000 1250 1500 2000	8	ISSA0808	2ZDAHF8
2500 3000	10	ISSA1010	-
3500 4000	12	ISSA1212	-

Table 13: Stainless Steel Vent and Intake Terminations

Model	Vent Diameter (in.)	Style	Heat Fab Part # Saf-T Vent	Z-Flex Part # Z-Vent
1000 1250 1500 2000	8	Tee	9890TEE	2SVST08
		Elbow	9814TERM	2SVEE0890
		Straight	9892	2SVSTPX08
2500 3000	10	Tee	91090TEE	2SVST10
		Elbow	91014TERM	2SVEE1090
		Straight	91092	2SVSTPX10
3500 4000	12	Tee	91290TEE	2SVST12
		Elbow	91214TERM	2SVEE1290
		Straight	91292	2SVSTPX12

Table 14: Polypropylene Vent and Intake Terminations

Model	Vent Diameter (in.)	Style	Centrotherm Part # InnoFlue	Z-Flex Part # Z-DENS
1000 1250 1500 2000	8	Tee	ISTT0820	2ZDTT8
		Elbow	-	-
		Straight	ISEP086	-
2500 3000	10	Tee	ISTT1020	-
		Elbow	-	-
		Straight	ISEP106	-
3500 4000	12	Tee	ISTT1220	-
		Elbow	-	-
		Straight	ISEP126	-

D. General Termination

1. Use only listed vent/combustion air terminals.
2. Follow the termination configurations shown in Table 15, and see Table 18 for acceptable termination components.
3. Maintain correct clearance and orientation between vent and combustion air terminals.
   a. The required spacing between vent and combustion air terminals is to prevent flue gas recirculation. Recirculation of flue gas products into the combustion air supply can cause damage to property or the appliance.
   b. When installed on the same wall, locate vent terminal 4 vent pipe diameters above the combustion air terminal. The snorkle configuration can be used when penetrations are at the same hieght.
4. Locate bottom of vent and combustion air terminals at least 12 in. (300 mm) [18 in. (460 mm) in Canada] above the normal snow line and at least 12 in. (300 mm) above grade level.
5. Do not install vent terminal directly above windows or doors.
6. Locate bottom of vent terminal at least 3 ft. (900 mm) above any forced air inlet located within 10 ft. (3.0 m).

Table 15: Recommended Venting Configurations and Material Options

Vent & Intake Materials	Vent Option		Penetration Through Structure	Termination	Parts Table	Reference Figure
Two Pipe Stainless Steel vent Galvanized Steel or PVC intake	1	Intake	Horizontal Sidewall	90° elbow	Table 13	Figure 6
		Vent	Horizontal Sidewall	Tee or 45° elbow		
	2	Intake	Horizontal Sidewall	90° elbow		-
		Vent	Vertical Roof	Tee or straight		
	3	Intake	Vertical Roof	Tee or 2 90° elbows		Figure 7 Figure 8
		Vent	Vertical Roof	Tee or straight		
Two Pipe Polypropylene vent Galvanized Steel or PVC intake	4	Intake	Horizontal Sidewall	90° elbow	Table 14	Figure 6
		Vent	Horizontal Sidewall	Tee or 45° elbow		
	5	Intake	Horizontal Sidewall	90° elbow		-
		Vent	Vertical Roof	Tee or straight		
	6	Intake	Vertical Roof	Tee or 2 90° elbows		Figure 7 Figure 8
		Vent	Vertical Roof	Tee or straight		
Two Pipe CPVC vent Galvanized Steel or PVC intake	7	Intake	Horizontal Sidewall	90° elbow	-	Figure 6
		Vent	Horizontal Sidewall	Tee or 45° elbow		
	8	Intake	Horizontal Sidewall	90° elbow		-
		Vent	Vertical Roof	Tee or straight		
	9	Intake	Vertical Roof	Tee or 2 90° elbows		Figure 7 Figure 8
		Vent	Vertical Roof	Tee or straight		
SS, PP, or CPVC vent Room air intake	10	Vent	Horizontal Sidewall	Tee or 45° Elbow	Table 13 Table 14	-
	11	Vent	Vertical Roof	Tee or straight		
NOTICE	1. It is recommended to use tees for both intake and vent terminations in extra windy locations. 2. All terminations shall have bird screens. 3. All non-metallic venting exposed to sunlight shall be UV resistant.					

7. If window and/or air inlet is within 4 ft. (1.2 m) of an inside corner, maintain at least 6 ft. (1.8 m) spacing between terminal and adjoining wall of inside corner.
8. Locate bottom of vent terminal at least 7 ft. (2.1 m) above a public walkway.
9. Maintain minimum clearance of at least 4 ft. (1.2 m) [3 ft. (900 mm)in Canada] horizontally between vent terminal and gas meters, electric meters, regulators, and relief equipment. Do not install vent terminal above or below this equipment.
10. Do not locate the vent terminal under decks or similar structures.
11. Top of terminal must be at least 24 in. (600 mm) below ventilated eaves, soffits, and other overhangs. In no case may the overhang exceed 48 in. (1200 mm). Where permitted by the authority having jurisdiction and local experience, the terminal may be located closer to unventilated soffits. The minimum vertical separation depends upon the depth of the soffit.
12. For multiple appliance installations with vertical roof terminals, separate vent pipes may be piped through a common conduit or chase so that one roof penetration may be made. Maintain recommended separations of terminations after penetration.
13. Maintain minimum 24 in. (610 mm) horizontal spacing between vent terminal and a building corner.
14. Under certain conditions, water in the flue gas may condense, and possibly freeze, on objects around the terminal including on the structure itself. If these objects are subject to damage by flue gas condensate, they should be moved or protected.
15. If possible, install the vent and combustion air terminals on a wall away from the prevailing wind. Reliable operation of this product cannot be guaranteed if terminals are subjected to winds in excess of 40 mph (64 km/hr).
16. Do not locate combustion air terminal in areas that might contain combustion air contaminates, such as near swimming pools.

⚠ WARNING

Use of cellular core PVC (ASTM F891), cellular core CPVC, or Radel® (polyphenylsulfone) in non-metallic venting systems is prohibited.
Covering non-metallic vent pipe and fittings with thermal insulation is prohibited.

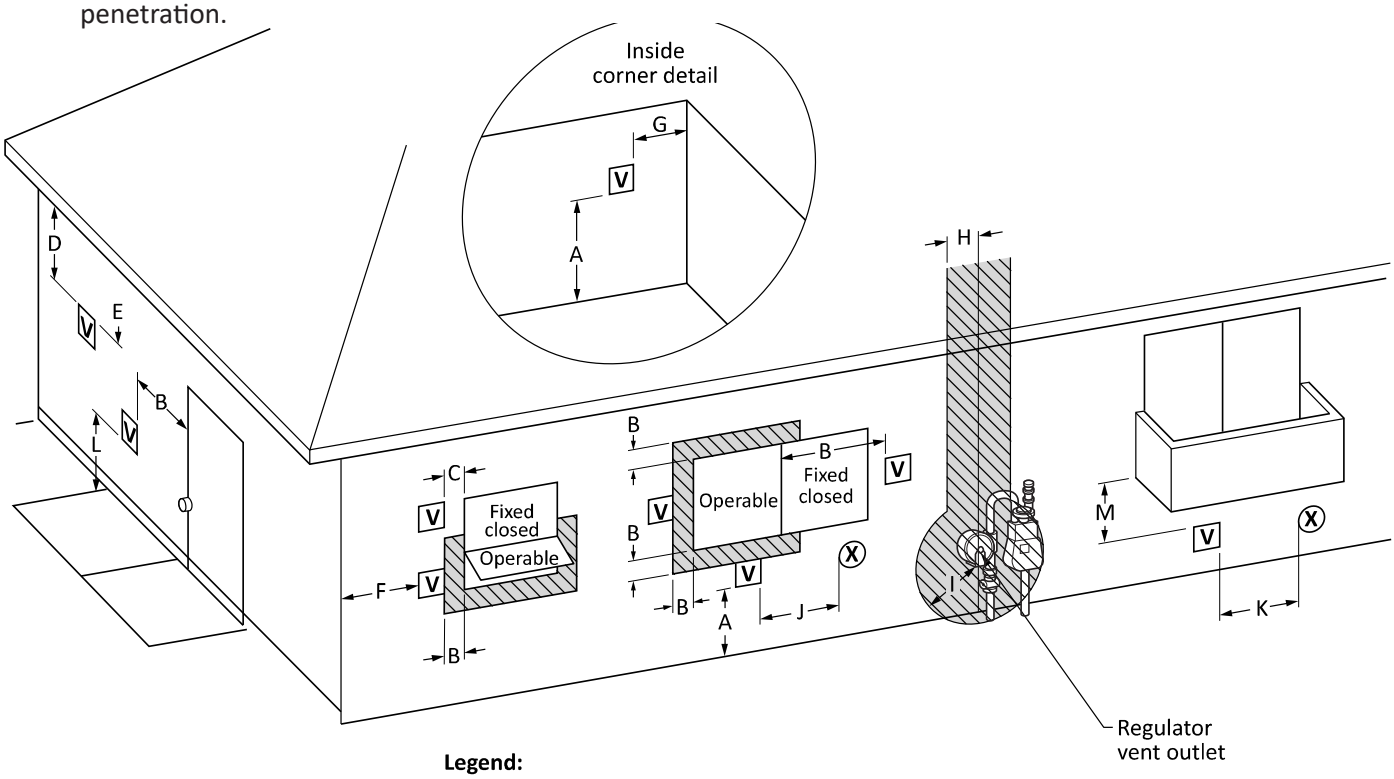

Legend:

V = Vent terminal

X = Air supply inlet

= Area where terminal is not permitted

Figure 5: Vent Terminal Clearances

Table 16: Direct Vent Terminal Clearances

		Canadian Installations[1]	US Installations[2]
A	Clearance above grade, veranda, porch, deck, or balcony	18 in. (46 cm)	12 in (30 cm)
B	Clearance to window or door that may be opened	6 in (15 cm) for appliances ≤ 10,000 Btuh (3 kW), 12 in (30 cm) for appliances > 10,000 Btuh (3 kW) and ≤ 100,000 Btuh (30 kW), 36 in (91 cm) for appliances >100,000 Btuh (30 kW)	6 in (15 cm) for appliances ≤ 10,000 Btuh (3 kW), 9 in (23 cm) for appliances > 10,000 Btuh (3 kW) and ≤ 50,000 Btuh (15 kW), 12 in (30 cm) for appliances > 50,000 Btuh (15 kW)
C	Clearance to permanently closed window	*	*
D	Vertical clearance to ventilated soffit located above the terminal within a horizontal distance of 2 ft (61 cm) from the center line of the terminal.	*	*
E	Clearance to unventilated soffit	*	*
F	Clearance to outside corner	*	*
G	Clearance to inside corner	*	*
H	Clearance to each side of center line extended above meter/regulator assembly	3 ft (91 cm) within a height of 15 ft (4.6 m)	*
I	Clearance to service regulator vent outlet	3 ft (91 cm)	*
J	Clearance to nonmechanical air supply inlet to building or the combustion air inlet to any other appliance	6 in (15 cm) for appliances ≤ 10,000 Btuh (3 kW), 12 in (30 cm) for appliances > 10,000 Btuh (3 kW) and ≤ 100,000 Btuh (30 kW), 36 in (91 cm) for appliances >100,000 Btuh (30 kW)	6 in (15 cm) for appliances ≤ 10,000 Btuh (3 kW), 9 in (23 cm) for appliances > 10,000 Btuh (3 kW) and ≤ 50,000 Btuh (15 kW), 12 in (30 cm) for appliances > 50,000 Btuh (15 kW)
K	Clearance to a mechanical air supply inlet	6 ft (1.83 m)	3 ft (91 cm) above if within 10 ft (3 m) horizontally
L	Clearance above paved sidewalk or paved driveway located on public property	7 ft (2.13 m) †	7 ft (2.13 m) for mechanical draft systems (Category I appliances). Vents for Category II and IV appliances cannot be located above public walkways or other areas where condensate or vapor can cause a nuisance or hazard*
M	Clearance under veranda, porch deck, or balcony	12 in (30 cm) ‡	*

NOTICE

* Clearance in accordance with local codes and the requirements of the gas supplier.
† A vent shall not terminate directly above a sidewalk or paved driveway that is located between two single family dwellings and serves both dwellings.
‡ Permitted only if veranda, porch, deck, or balcony is fully open on a minimum of two sides beneath the floor.
Notes:
1) In accordance with the current CSA B149.1, Natural Gas and Propane Installation Code
2) In accordance with the current ANSI Z223.1/NFPA 54, National Fuel Gas Code
3) If locally adopted installation codes specify clearances different than those illustrated, then the most stringent clearance shall prevail.

Table 17: Other than Direct Vent Terminal Clearances

		Canadian Installations[1]	US Installations[2]
A	Clearance above grade, veranda, porch, deck, or balcony	18 in (46 cm)	12 in (30 cm)
B	Clearance to window or door that may be opened	6 in (15 cm) for appliances ≤ 10,000 Btuh (3 kW), 12 in (30 cm) for appliances > 10,000 Btuh (3 kW) and ≤ 100,000 Btuh (30 kW), 36 in (91 cm) for appliances >100,000 Btuh (30 kW)	4 ft (1.2 m) below or to side of opening; 1 ft (300 mm) above opening
C	Clearance to permanently closed window	*	*
D	Vertical clearance to ventilated soffit located above the terminal within a horizontal distance of 2 ft (61 cm) from the center line of the terminal.	*	*
E	Clearance to unventilated soffit	*	*
F	Clearance to outside corner	*	*
G	Clearance to inside corner	*	*
H	Clearance to each side of center line extended above meter/regulator assembly	3 ft (91 cm) within a height 15 ft (4.6 m)	*
I	Clearance to service regulator vent outlet	3 ft (91 cm)	*
J	Clearance to nonmechanical air supply inlet to building or the combustion air inlet to any other appliance	6 in (15 cm) for appliances ≤ 10,000 Btuh (3 kW), 12 in (30 cm) for appliances > 10,000 Btuh (3 kW) and ≤ 100,000 Btuh (30 kW), 36 in (91 cm) for appliances >100,000 Btuh (30 kW)	4 ft (1.2 m) below or to side of opening; 1 ft (300 mm) above opening
K	Clearance to a mechanical air supply inlet	6 ft (1.83 m)	3 ft (91 cm) above if within 10 ft (3 m) horizontally
L	Clearance above paved sidewalk or paved driveway located on public property	7 ft (2.13 m) †	7 ft (2.13 m) for mechanical draft systems (Category I appliances). Vents for Category II and IV appliances cannot be located above public walkways or other areas where condensate or vapor can cause a nuisance or hazard
M	Clearance under veranda, porch deck, or balcony	12 in (30 cm) ‡	*

NOTICE

* Clearance in accordance with local codes and the requirements of the gas supplier.
† A vent shall not terminate directly above a sidewalk or paved driveway that is located between two single family dwellings and serves both dwellings.
‡ Permitted only if veranda, porch, deck, or balcony is fully open on a minimum of two sides beneath the floor.
Notes:
1) In accordance with the current CSA B149.1, Natural Gas and Propane Installation Code
2) In accordance with the current ANSI Z223.1/NFPA 54, National Fuel Gas Code
3) If locally adopted installation codes specify clearances different than those illustrated, then the most stringent clearance shall prevail.

Table 18: Table of Acceptable Terminations

Flue Gas Vent Terminations

Sidewall

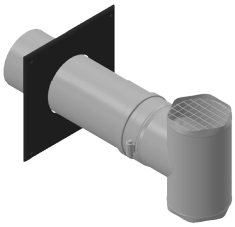

Tee Termination
Vertical Run

20°-45° Elbow
Terminated Downward

Roof

Straight Termination

Tee Termination
Vertical Run

Velocity Cone

Combustion Air Intake Terminations

Sidewall

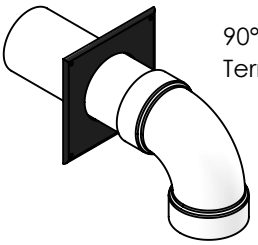

90° Elbow
Terminated Downward

Roof

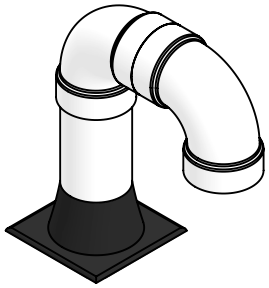

Two 90° Elbows
Terminated Downward

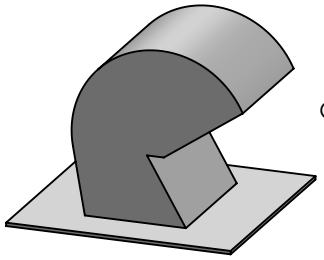

Gooseneck

Notes:
Do not use Louvers for direct vent systems
One appliance per gooseneck termination
Vent and intake piping must not share the same gooseneck
All terminations should have Bird/Rodent Screens
Do not use rain caps, Rain will drain through boot tee or condensate drain

E. Vent and Combustion Air Terminations

1. Vent Piping
   a. Install fire stops where vent passes through floors, ceilings or framed walls. The fire stop must close the opening between the vent pipe and the structure.
   b. Whenever possible, install vent straight through the roof.
   c. Size roof opening to maintain minimum clearance of 1 in. (25 mm) from combustible materials.
   d. Extend vent pipe to maintain minimum vertical distance for expected snow accumulation. Provide brace as required.
   e. Install storm collar on vent pipe immediately above flashing. Apply Dow Corning Silastic 732 RTV Sealant or equivalent between vent pipe and storm collar to provide weather-tight seal.
2. Combustion Air Piping
   a. If possible, locate combustion air termination in the same roof location as the vent termination to prevent nuisance shutdowns. Alternatively, this appliance may be installed with a vertical roof vent terminal and sidewall combustion air terminal.
   b. Size roof opening to allow easy insertion of combustion air piping and allow proper installation of flashing and storm collar to prevent moisture from entering the structure.
   c. Use appropriately designed vent flashing when passing through roofs. Follow flashing manufacturers' instructions for installation.
   d. Extend combustion air pipe to maintain minimum vertical and horizontal distance of 12 in (300 mm) from roof surface or from the maximum snow level.

⚠ CAUTION

Intermittent shutdowns can occur when the vent terminals are subject to winds above 40 mph. The required spacing between vent and combustion air terminals is to prevent flue gas recirculation. Recirculation of flue gas products into the combustion air supply can cause damage to property or the appliance.

NOTICE

Methods of securing and sealing terminals to the outside wall must not restrain the thermal expansion of the vent pipe.

Exterior run should be included in equivalent vent/combustion air lengths.

Vertical Venting and combustion air roof penetrations (where applicable) require the use of roof flashing and storm collar, which are not supplied with appliance, to prevent moisture from entering the structure.

Examine all components for possible shipping damage prior to installation.

All condensate that forms in vent must be able to drain back to the heat exchanger or a boot tee with a drain.

The venting system must be free to expand and contract and must be supported in accordance with installation instructions included by the original component manufacturers, whenever applicable. Polypropylene pipe sections must not be fully inserted. Leave 1/4 to 5/8 in. (6 mm to 16 mm) per joint to allow for thermal expansion.

⚠ WARNING

Failure to vent this appliance in accordance with these instructions could cause products of combustion to enter the building resulting in severe property damage, personal injury or death.

Do not locate vent termination under a deck, or where exposed to prevailing winds.

Do not locate combustion air termination where volatile vapors or other chemicals are present. Severe corrosion and failure will result.

Do not interchange vent systems or materials unless otherwise specified.

Do not apply thermal insulation to vent pipe or fittings.

Do not use a barometric damper or draft hood with this appliance.

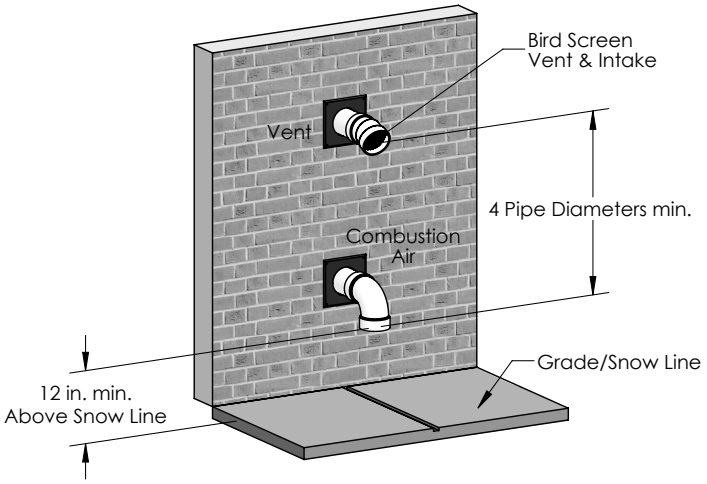

Figure 6: Horizontal Sidewall Termination

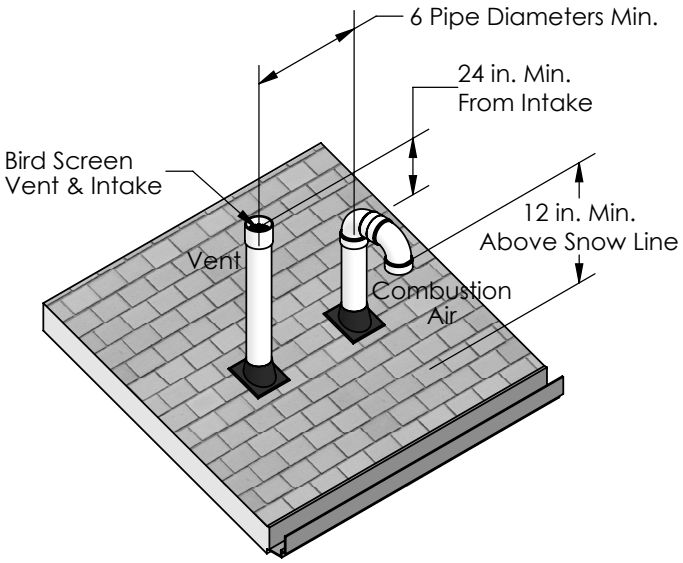

Figure 7: Slopped Roof Termination

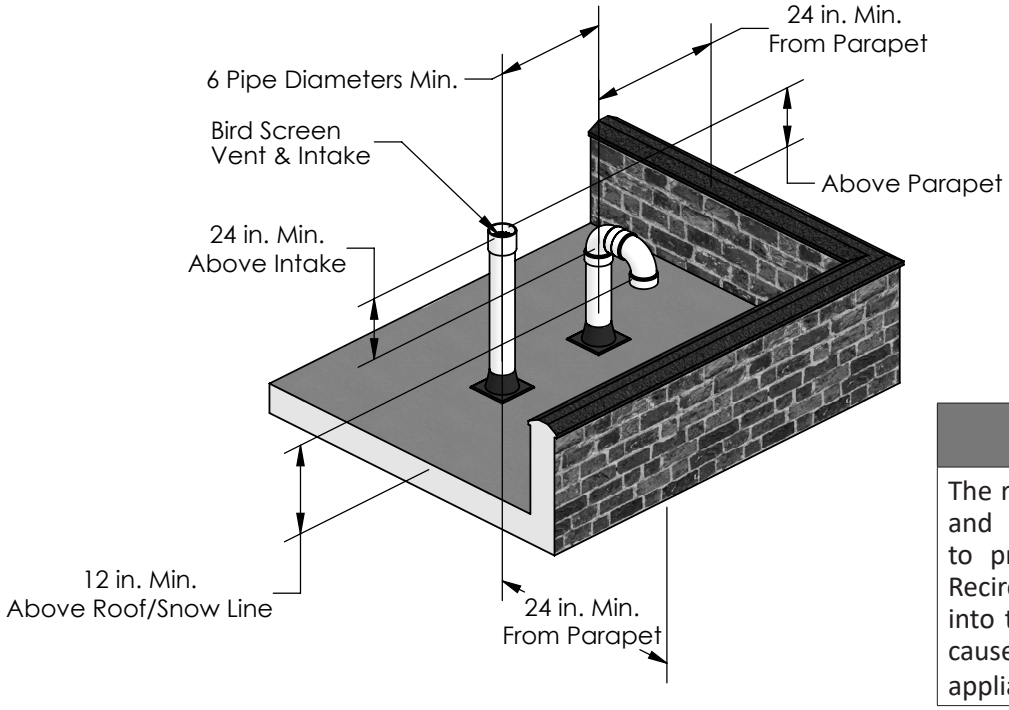

Figure 8: Flat Roof Vent Terminations

⚠ WARNING

The required spacing between vent and combustion air terminals is to prevent flue gas recirculation. Recirculation of flue gas products into the combustion air supply can cause damage to property or the appliance.

Notes:
1. All terminations must have bird/rodent screens.
2. If Possible, Install Sidewall venting on a wall away from prevailing wind.
3. For roof terminations, install vent terminal downstream of prevailing winds relative to intake terminal.
4. It is recommended to use tee terminations with a vertical run in extra windy areas.

⚠ CAUTION

Installing multiple vent terminations too close together may result in combustion product water vapor condensation on building surfaces where vent terminations are placed, causing subsequent frost damage. To avoid/minimize frost damage, extend the distance from building surfaces to vent termination end and increase the horizontal distance between adjacent vent terminations.

F. Multiple Appliance Terminations

1. Vent Piping Terminations
   a. Multiple appliance vent terminations are shown in Figure 9.
   b. Each individual appliance must have its own vent pipe and vent terminal unless a common venting system is used following the guidelines of the "Engineered Venting Method" section in this manual.
   c. For horizontal sidewall terminations, maintain at least 6 pipe diameters minimum horizontal distance between any adjacent individual vent terminations. Additional horizontal spacing between any adjacent individual vent terminations as well as extending the distance from building surfaces to vent termination end are recommended to avoid frost damage to building surfaces where vent terminations are placed.
   d. Multiple individual vertical vent pipes may be piped through a common conduit or chase so that one roof penetration may be made.
   e. For vertical roof terminations, maintain at least 6 pipe diameters minimum horizontal distance between adjacent individual appliance vent terminations.
2. Combustion Air Piping
   a. Multiple appliance combustion air terminations are shown in Figure 9.
   b. Each individual appliance must have its own combustion air pipe and terminal when using category IV venting.
   c. Individual appliance sidewall terminals must be placed at least 12 in. (300 mm) [18 in. (460 mm) in Canada] above the ground plus the expected snow accumulation.

⚠ WARNING

Moisture and ice may form on the surface around vent termination.
To prevent deterioration, surface must be in good repair (sealed, painted, etc.).
Do not allow low spots in the vent where condensate may pool.
Use specified vent and combustion air pipe diameters.
All vent and combustion air piping must be sealed and airtight.
Alteration of the appliance vent connection is prohibited.

⚠ WARNING

The joint between the terminal and the last piece of pipe must be outside of the building.
The vent for this appliance shall not terminate:
1. Over public walkways; or
2. Near soffit vents or crawl space vents or other areas where condensate or vapor could create a nuisance or hazard or cause property damage; or
3. Where condensate vapor could cause damage or could be detrimental to the operation of regulators, pressure relief valves, or other equipment.

   d. Do not exceed the maximum combustion air pipe length for an individual appliance as listed in Table 6.
   e. If possible, locate the vent and combustion air terminals for each appliance on the same wall to prevent nuisance shutdowns. If not, each appliance may be installed with a roof vent terminal and sidewall combustion air terminal.

G. Terminal Installation

1. Use the terminal connections supplied by the venting manufacturer. Follow manufacturer's instructions to attach the terminal to the vent system.
2. For PVC/CPVC terminals, apply a heavy bead of silicone to the male end of the terminal before inserting it into the last piece of pipe. Orient the terminal so that the seam in the terminal is at 12:00. Smooth the silicone over the seam between the terminal and the last piece of pipe, applying additional silicone if necessary to ensure a tight seal. Allow the silicone to cure per the silicone manufacturer's instructions before operating the appliance.
3. Install Bird/Rodent screens in the terminals. Use a screen having 1/2 in. x 1/2 in. (13 mm x 13 mm) mesh.
4. Adhere to the minimum and maximum wall thickness specified by the manufacturer of the wall penetration assembly.

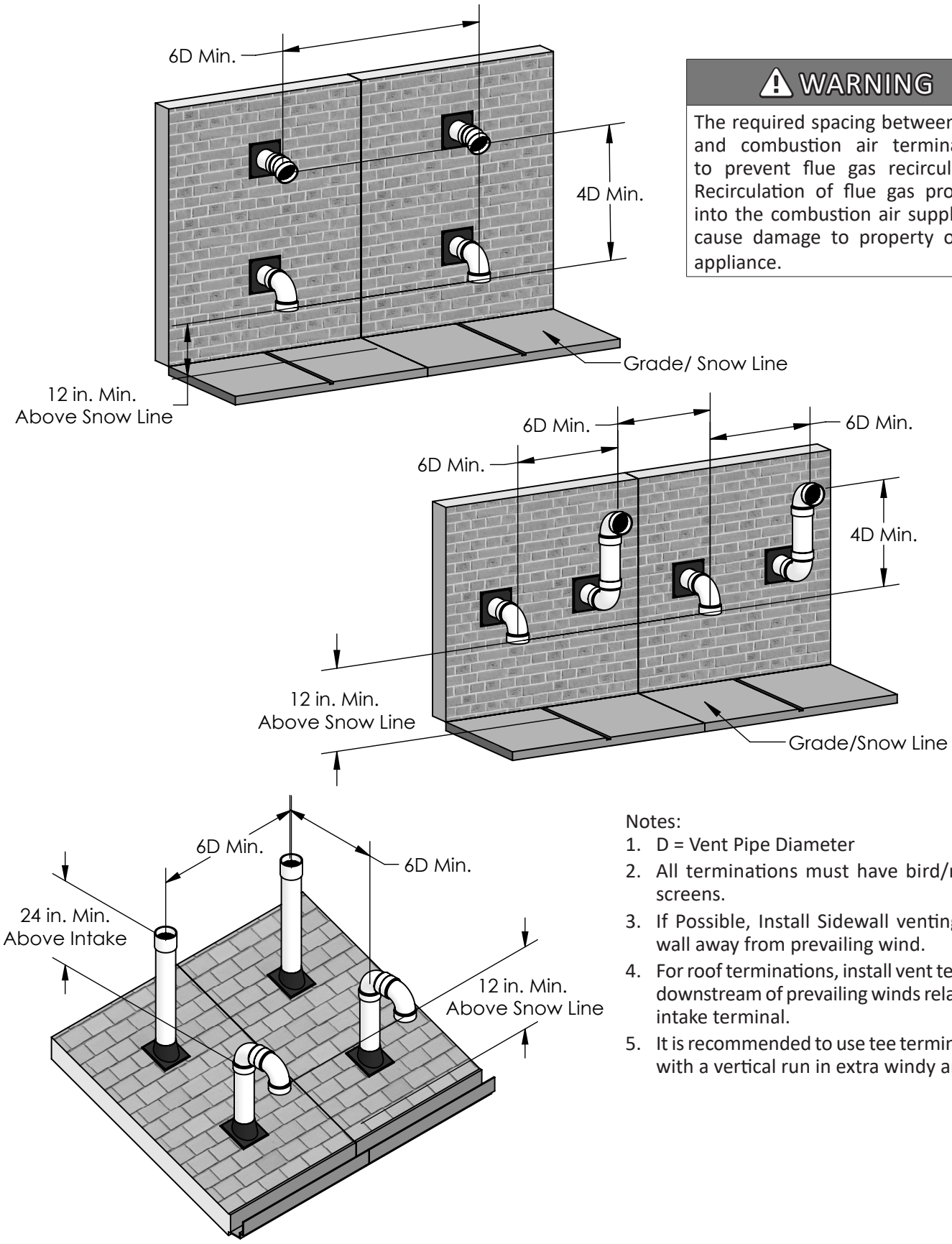

⚠ WARNING

The required spacing between vent and combustion air terminals is to prevent flue gas recirculation. Recirculation of flue gas products into the combustion air supply can cause damage to property or the appliance.

Notes:

1. D = Vent Pipe Diameter
2. All terminations must have bird/rodent screens.
3. If Possible, Install Sidewall venting on a wall away from prevailing wind.
4. For roof terminations, install vent terminal downstream of prevailing winds relative to intake terminal.
5. It is recommended to use tee terminations with a vertical run in extra windy areas.

Figure 9: Multiple Appliance Direct Vent Termination

H. Polypropylene Venting

1. Running Flexible Polypropylene Vent (Liner) Through Unused Chimney Chase
   a. It is the responsibility of the installing contractor to procure polypropylene vent system pipe and related components.
   b. All listed polypropylene vent system manufacturers must comply with the requirements of *ULC-S636-08* 'Standard for Type BH Gas Venting Systems'. For Canadian installation, polypropylene vent must be listed as a *ULC-S636* approved system.
   c. Flexible polypropylene pipe must be treated carefully and stored at temperatures higher than 41 degrees F.
   d. When flexible polypropylene pipe (liner) is used for combustion air supply, the pipe (liner) can be installed in a vertical or horizontal position.
   e. Follow manufacturer instructions regarding application/listing, permits, minimum clearances to combustibles, and installation details (proper joint assembly, pipe support and routing, gasket and fitting installation, optional tooling availability/usage, routing through masonry chimney for combustion product venting or, combination of combustion product venting and combustion air supply).
   f. When using a masonry chimney as a passageway for flexible polypropylene pipe, the chase must be structurally sound and free of any debris or obstructions.
   g. To prevent condensate pooling and damage to vent, offsets (bend) cannot exceed 45˚. Multiple offsets are allowed in a chase.
2. Pressure drop for flexible polypropylene line is 20 % greater than from rigid pipe. Multiply measured flexible polypropylene liner length by 1.2 to obtain equivalent length.
3. Maximum equivalent vent length of flexible polypropylene liner is 48 ft. (14.6 m).

I. Optional Room Air for Combustion

1. General Guidelines
   a. Room air is optional for commercial applications. Follow the requirements in this section when air for combustion is supplied from the boiler room.
   b. Avoid combustion air contaminants in the boiler room. Permanently remove any contaminants found in the boiler room. If contaminants cannot be removed, do not use room air for combustion.

⚠ WARNING

Asphyxiation Hazard. Vent systems made by listed PP vent system manufacturers rely on gaskets for proper sealing. When this type of vent system is used, take the following precautions:

Make sure that gasket is in position and undamaged in the female end of the pipe.

Make sure that both male and female pipes are free of damage prior to assembly.

Only cut vent pipe as permitted by the vent manufacturer in accordance with their instructions. When pipe is cut, the cut end must be square and carefully deburred prior to assembly.

Use locking band clamps at all vent pipe joints.

Flexible polypropylene vent must be installed only in an unused chimney. A chimney, either single or multiple flue type, is considered unused when one of the flues is being used for any appliance venting, or When one of the multiple flues is being used for appliance venting. The flexible vent installation is not permitted through any of the adjacent flues.

Do not bend or attempt to install flexible pipe if it has been stored at ambient temperature below 41 F. This will cause material to became brittle and will lead to cracks, resulting in flue gas leaks.

Do not install flexible polypropylene pipe at an angle greater than 45 degrees from vertical when used for combustion product venting. Failure to do so will result in improper condensate drainage and possible subsequent vent pipe blockage.

2. Outdoor Openings to Boiler Room
   a. Provide combustion and ventilation air to the boiler room or enclosure. Follow the National fuel Gas Code*, ANSI Z223.1, or, i*n Canada, Installation Code for Gas Burning Appliances and Equipment*, CSA Standard B149 Code* as well as all applicable local codes. Use one of the following methods.

⚠ WARNING

This appliance must not be installed in a room under negative pressure. An equipment room under negative pressure could deplete the combustion air supply to the appliance and cause leakage of flue gas from the venting system.

NOTICE

Pressure drop for flexible polypropylene line is 20 % greater than from rigid pipe. Multiply measured flexible polypropylene liner length by 1.2 to obtain equivalent length.

Maximum equivalent vent length of flexible polypropylene liner is 48 ft. (14.6 m).

Installation of a polypropylene vent system should adhere to the vent manufacturer's installation instructions supplied with the vent system.

⚠ WARNING

DO NOT mix vent systems of different types or manufacturers. Failure to comply could result in severe personal injury, death, or substantial property damage.

DO NOT connect venting to a chimney flue that is servicing a separate appliance designed to burn solid fuel.

DO NOT use chimney for Combustion air intake.

DO NOT insulate polypropylene vent pipes. Excessive heat could cause premature vent pipe failure.

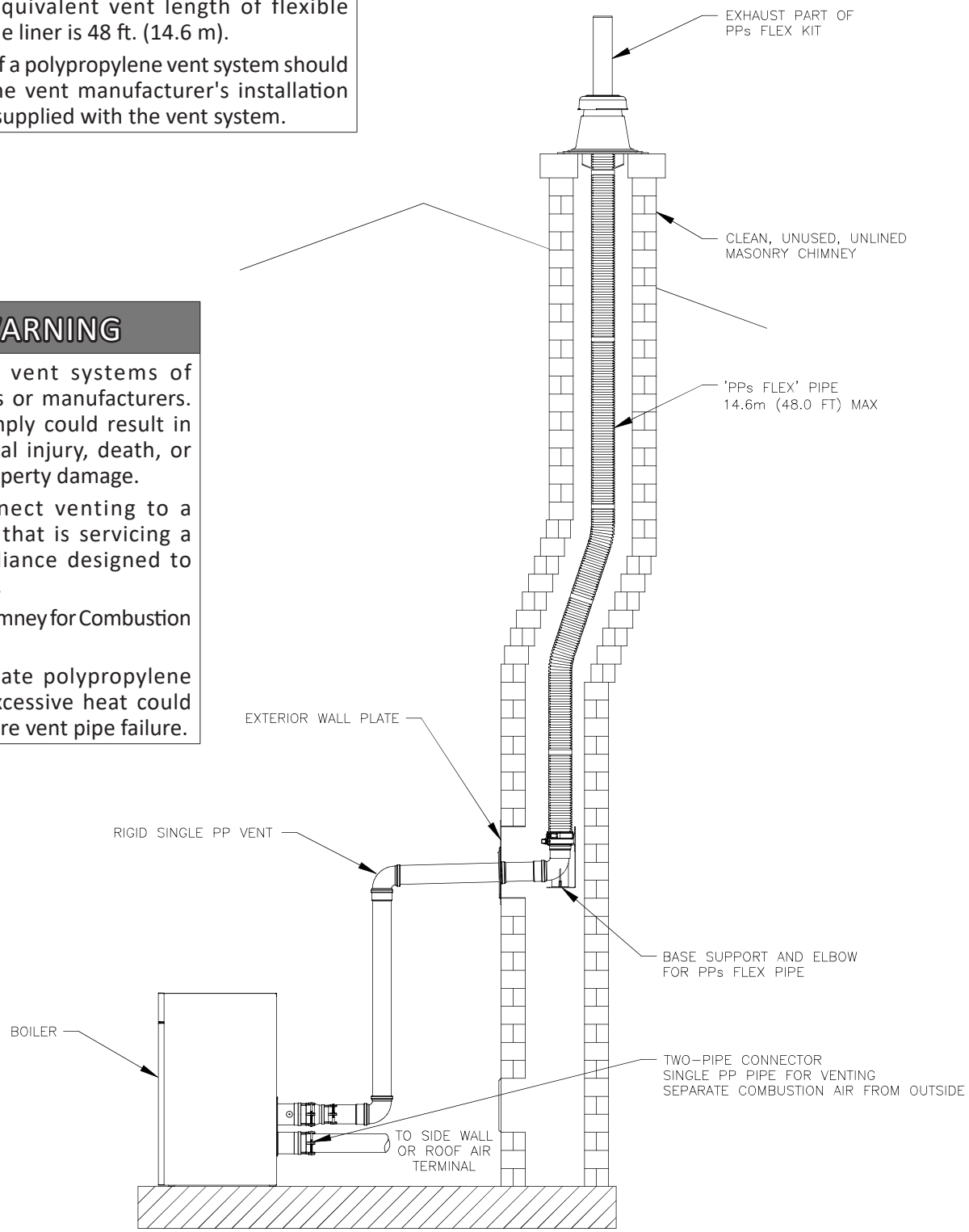

Figure 10: Flexible Vent in Masonry Chimney with Separate Combustion Air Intake

b. Natural gas and propane installation code specifies venting systems and air supply for appliances. Air supply shall be provided when either an appliance or a combination of appliances has a total input exceeding 400,000 Btu/h.

c. Air supply is defined as combustion air, excess air, flue gas dilution air, primary air, secondary air, and ventilation air. The air supply requirements below are a summation of Clause 8.4 specific to this gas appliance.

3. Air Supply Requirements for Appliances having an input exceeding 400 MBH:

a. Ventilation Air: an opening for ventilation air at the highest point that opens to the outdoors shall provide Ventilation of the space. The cross sectional area of this opening shall be at least 10% of the area required for combustion air, but in no case shall the cross-sectional area be less than 10 in^2 (*6500 mm^2*).

b. Combustion Air: For combustion air where the air supply is provided by natural airflow from outdoors, in addition to the opening for ventilation air, there shall be permanent opening having a total cross-sectional free area of not less than 1 in^2 for each 30,000 BTU/hr. (*70 mm^2 for each kW*) of the total rated input of the boiler(s). The location of the opening(s) shall not interfere with the openings for ventilation air. Please refer to the codes listed above for combustion air openings when natural draft, fan assisted or power draft assisted equipment are in the space.

⚠ WARNING

Sources of combustion air contaminants, including chlorines, chlorofluorocarbons (CFC's), petroleum distillates, detergents, volatile vapors or other chemicals must not be present in the boiler room. If any of these contaminants are present, severe corrosion and failure will result.

Asphyxiation Hazard. Common manifold venting requires special considerations. Follow the instructions in this manual.

The manufacturer takes no responsibility for vent systems that create issues and or affect the performance of the appliance.

Improper Installation of a Category II vent system resulting in positive pressure in the vent system can result in flue gas spillage and carbon monoxide emissions, causing personal injury, death, or substantial property damage.

c. When an air supply duct is used to supply combustion air, its discharge opening shall be located where there is no possibility of cold air affecting steam/water lines or other temperature sensitive equipment.

4. Combustion Air Supply Dampers, Louvers, and Grilles

a. The free area of the combustion air supply opening shall be calculated by subtracting the blockage area of all fixed louvers, grilles or screens from the gross area of the opening.

b. Openings in a fixed louver, grille, or screen shall have no dimension smaller than ¼" (6 mm).

c. No manually operated dampers or manually operated adjustable louvers are permitted.

d. Motorized dampers or Louvers shall be interlocked so the burner(s) cannot operate unless the damper or louver is in the fully open position.

5. Mechanical Combustion Air Supply

a. When combustion air is supplied by mechanical means, an airflow sensing device shall be installed and wired into the safety limit circuit of the primary safety control to shut off the gas in the event of an air supply failure.

6. Appliance Venting

a. This appliance is listed as Category IV venting and requires special venting systems as previously described.

i. Venting for Category IV appliances shall be as specified or furnished by the manufacturer of the listed appliance.

ii. A special venting system shall be installed in accordance with the terms of its listing and the vent manufacturers certified installation manual.

iii. A flue gas vent or a vent connector shall not be installed inside either a duct or a shaft used for return air, hot air, ventilating air, or combustion air.

iv. An appliance that operates at a positive vent pressure shall not be connected to a venting system serving any other appliance. This appliance operates at a positive vent pressure.

v. A factory-built chimney used for venting an appliance shall be certified.

J. Removing Existing Appliance

When an existing appliance is removed from a common venting system, the common venting system is likely to be too large for proper venting of the remaining appliances. At the time of removal of an existing appliance, the following steps should be performed with each appliance remaining connected to the common venting system. Make sure the appliances are not in operation while carrying out these steps.

1. Seal any unused openings in the common venting system.
2. Visually inspect the venting system for proper size and horizontal pitch and ensure there is no blockage or restriction, leakage, corrosion, or other deficiencies which could cause an unsafe condition.
3. Insofar as is practical, close all exterior doors and windows, and all doors between the space where the appliances connect to the common venting system and other spaces of the building. Turn on any exhaust fans, such as range-hoods and bathroom exhausts, so they will operate at maximum speed. Do not operate a summer exhaust fan. Close fireplace dampers.
4. Place in operation the appliance being inspected. Follow the Lighting (or Operating) Instructions. Adjust thermostat so appliance will operate continuously.
5. Test for spillage at the draft hood relief opening after 5 minutes of main burner operation. Use the flame of a match or candle, or smoke from a cigarette, cigar or pipe.
6. After it has been determined that each appliance connected to the common venting system properly vents when tested as outlined above, return doors, windows, exhaust fans, fireplace dampers and any other gas burning appliance to their previous conditions of use.
7. Any improper operation of the common venting system should be corrected so the installation conforms with the *National Fuel Gas Code, ANSI Z223.1/NFPA 54* and/or the *Natural Gas and Propane Installation Code, CAN/CSA B149.1*. Resizing of any portion of the common venting system, should be done in accordance with the National Fuel Gas Code, ANSI Z223.1/NFPA 54 and/or the Natural Gas and Propane Installation Code, CAN/CSA B149.1.

NOTICE

Please note that the information provided in this manual relative to the Canadian Standard is not meant to be all-inclusive. Reading the entire Standard is strongly suggested. The final approval of all system designs must be acceptable to the authority having jurisdiction.

K. Special Installation Requirements for Massachusetts

1. For all sidewall horizontally vented gas fueled equipment installed in every dwelling, building or structure used in whole or in part for residential purposes and where the sidewall exhaust vent termination is less than seven (7) feet above grade, the following requirements shall be satisfied:
   a. If there is no carbon monoxide detector with an alarm already installed in compliance with the most current edition of NFPA 720, NFPA 70 and the Massachusetts State Building Code in the residential unit served by the sidewall horizontally vented gas fueled equipment, a battery operated carbon monoxide detector with an alarm shall be installed in compliance with the most current edition of NFPA 720, NFPA 70 and the Massachusetts State Building Code.
   b. In addition to the above requirements, if there is not one already present, a carbon monoxide detector with an alarm and a battery back-up shall be installed and located in accordance with the installation requirements supplied with the detector on the floor level where the gas equipment is installed. The carbon monoxide detector with an alarm shall comply with 527 CMR, ANSI/UL 2034 Standards or CSA 6.19 and the most current edition of NFPA 720. In the event that the requirements of this subdivision can not be met at the time of the completion of the installation of the equipment, the installer shall have a period of thirty (30) days to comply with this requirement; provided, however, that during said thirty (30) day period, a battery operated carbon monoxide detector with an alarm shall be installed in compliance with the most current edition of NFPA 720, NFPA 70 and the Massachusetts State Building Code. In the event that the sidewall horizontally vented gas fueled equipment is installed in a crawl space or an attic, the carbon monoxide detector may be installed on the next adjacent habitable floor level. Such detector may be a battery operated carbon monoxide detector with an alarm and shall be installed in compliance with the most current edition of NFPA 720, NFPA 70 and the Massachusetts State Building Code.
   c. A metal or plastic identification plate shall be permanently mounted to the exterior of the building at a minimum height of eight (8) feet above grade directly in line with the exhaust vent terminal for the horizontally vented gas fueled heating appliance or equipment. The sign shall read, in print size no less than one-half (1/2) inch in size, “GAS VENT DIRECTLY BELOW. KEEP CLEAR OF ALL OBSTRUCTIONS”.
   d. A final inspection by the state or local gas inspector of the sidewall horizontally vented equipment shall not be performed until proof is provided that the state or local electrical inspector having jurisdiction has granted a permit for installation of carbon monoxide detectors and alarms as required above.
2. EXEMPTIONS: The following equipment is exempt from 248 CMR 5.08(2)(a) 1 through 4:
   a. The equipment listed in Chapter 10 entitled “Equipment Not Required To Be Vented” in the most current edition of NFPA 54 as adopted by the Board; and
   b. Product Approved sidewall horizontally vented gas fueled equipment installed in a room or structure separate from the dwelling, building or structure used in whole or in part for residential purposes.
3. When the manufacturer of Product Approved sidewall horizontally vented gas equipment provides a venting system design or venting system components with the equipment, the instructions for installation of the equipment and the venting system shall include:
   a. A complete parts list for the venting system design or venting system; and
   b. Detailed instructions for the installation of the venting system design or the venting system components.
4. When the manufacturer of a Product Approved sidewall horizontally vented gas fueled equipment does not provide the parts for venting flue gases, but identifies “special venting systems”, the following shall be satisfied:
   a. The referenced “special venting system” instructions shall be included with the appliance or equipment installation instructions; and
   b. The “special venting systems” shall be Product Approved by the Board, and the instructions for that system shall include a parts list and detailed installation instructions.
5. A copy of all installation instructions for all Product Approved sidewall horizontally vented gas fueled equipment, all venting instructions, all parts lists for venting instructions, and/or all venting design instructions shall remain with the appliance or equipment at the completion of the installation.

VIII. Condensate Disposal

A. General

1. Note the following when disposing of the condensate:
   a. Condensate is slightly acidic, typical pH around 3.5 - 4.5. Do not route the drain line through areas that could be damaged by leaking condensate.
   b. Do not route or terminate the condensate drain line in areas subject to freezing temperatures.
   c. If the point of condensate disposal is above the trap, a condensate pump is required to move the condensate to the drain. Select a condensate pump listed for use with condensing appliance—and equipped with an overflow switch.
   d. Do not attempt to substitute another trap for one provided with the appliance.
   e. Slope condensate drain pipe at least 1/8” per foot in the direction of discharge.
2. Refer to Table 19 when sizing condensate drain line, pump and neutralizer kit. Table 20 lists optional neutralizer kits available from factory.

Table 19: Maximum Condensate Flow

Model	Maximum Condensate Flow Rate (GPH)
1000	9.00
1250	10.32
1500	12.24
2000	16.10
2500	18.25
3000	21.40
3500	23.10
4000	24.00

NOTICE

Do not crimp condensate drain lines or reduce drain line inner diameter size, unless adapting to a neutralizer kit.

Do not manifold condensate drains and vent drains together.

Consult local authorities regarding disposal of flue gas condensate into the public waste water system.

Do not use metallic pipe or fittings for condensate drain lines.

B. Condensate Drain Assembly

1. Locate the condensate trap assembly shipped loose with this appliance.
2. Install the condensate trap on the lower rear of the appliance as shown in Figure 11.
3. Connect condensate float switch wires to the wire harness extended out of the rear junction box (from terminals 75 and 76 on PCB 1).

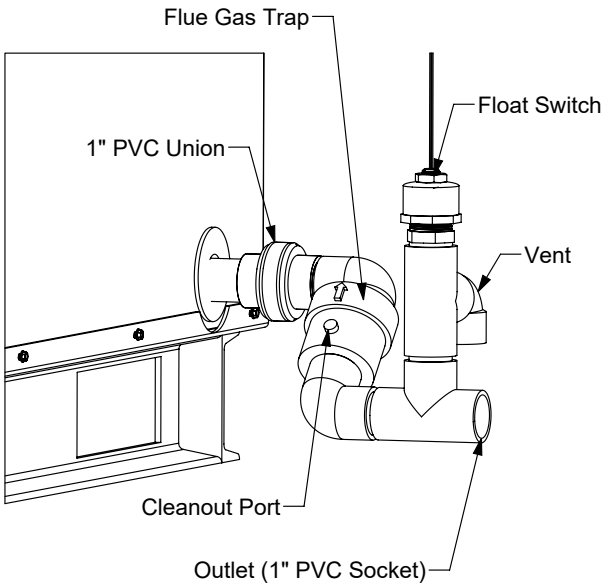

Figure 11: Condensate Trap Assembly

4. The flue gas trap prevents flue gases from escaping into the boiler room.
5. The float switch interrupts the limit string in the event the drainage of the condensate is blocked.

C. Condensate Neutralizer Installation

1. Some jurisdictions may require that the condensate be neutralized before being disposed of. Follow local codes pertaining to condensate disposal.
2. A condensate neutralizer kit is available from factory as optional equipment. Refer to Table 20 for size specific part number. Follow local codes and instructions enclosed with the kit for condensate neutralizer installation.
3. Limestone chips will get coated by neutral salts (product of chemical reaction between limestone and acidic condensate) and lose neutralizing effectiveness over time. Therefore, periodic condensate neutralizer maintenance and limestone chip replacement are required for proper neutralization of the condensate.

Table 20: Condensate Neutralizer Kit

Model	Condensate Neutralizer Kit, PN	Condensate Neutralizer, Refill Kits, PN
1000	107860-01	107886-01
1250	107860-02	107886-02
1500	107860-02	107886-02
2000	107860-02	107886-02
2500	107860-05	107886-05
3000	107860-05	107886-05
3500	107860-05	107886-05
4000	107860-05	107886-05

D. Common Condensate pump/Sump

1. A common condensate pump/sump may be used. Run separate piping from each condensate drain to the sump. A common drain may be used to discharge condensate from the sump.
2. If a common sump is used, individual drain lines should be constructed, using material listed above, such that one drain cannot back feed into another drain.
3. Do not manifold condensate and vent drains together.

⚠ WARNING

Failure to install the condensate drain in accordance with the above instructions could cause flue gas to enter the building, resulting in personal injury, death, or substantial property damage.

NOTICE

Flue gas condensate is corrosive. Route condensate drain line in a manner such that any condensate leakage will not cause property damage.

If the condensate line is obstructed in any way, the float switch will prevent the appliance from firing.

Some jurisdictions may require that condensate be neutralized prior to disposal.

The condensate drain trap should be flushed with clean water as part of the appliance maintenance schedule to remove any debris that might have accumulated.

IX. Hydronic Piping

A. Boiler Piping

These boilers are designed to operate in a closed loop pressurized system. Minimum pressure in the boiler must be 14.5 psi (100 kpa). Proper operation requires a piping system that can provide sufficient water flow through the boiler and meet the water quality requirements.

B. General Piping Guidelines

1. Primary/Secondary piping is the recommended piping configuration. Isolate the appliance from the system using closely spaced tees (12 inches or 4 pipe diameter) and size a circulation pump that ensures sufficient flow is maintained through the boiler.
   a. The flow rate through the primary loop is maintained by the installer provided circulator.
   b. Other piping configurations may be used. However, it is the responsibility of the installer to size circulator(s) that could overcome the heat exchanger and system pressure drops.
   c. Inadequate flow through the boiler can cause high limit shutdowns, hot spots, and localized boiling which could severely damage the heat exchanger.
   d. For possible piping configurations, see section "X. Heating Boiler Piping diagrams".

C. Factory Supplied Outlet Water Manifold

1. A pressure relief valve is included with every boiler. If the Relief valve is shipped loose, install it to the outlet manifold as shown in Figure 12.
2. When piping the appliance to the system, do not install an elbow closer than 5 pipe diameters from the flow switch.
3. When adapting the grooved outlet to the system piping, use a coupling that conforms to local codes and ordinances. Victaulic 107N couplings are available from factory.

⚠ WARNING

Failure to properly pipe boiler may result in improper operation and damage to the boiler or structure.

Install boiler so that the gas ignition system components are protected from water (dripping, spraying, rain, etc.) during appliance operation and service (circulator replacement, etc.).

Oxygen contamination of the boiler water will cause corrosion of iron and steel boiler components, and can lead to boiler failure. The manufacturer's Standard Warranty does not cover problems caused by oxygen contamination of boiler water or scale (lime) build-up caused by frequent addition of water.

Installation is not complete unless a safety relief valve is installed in the trapping located on the water manifold or the supply piping.

Failure to maintain the flow through boiler within specified limits could result in erratic operation or premature boiler failure.

Where it is not possible to install a separate boiler loop, the system circulator must be sized to ensure that the flow through boiler stays within the defined parameters to prevent overheating when the boiler is fired at it's full rated input. Install a flow meter to measure the flow, or fire the boiler at full rate and ensure the boiler delta T does not exceed 55F.

It is recommended that the boiler piping systems utilize Primary/Secondary configurations. The use of other piping configurations could result in improper building and system flow rates leading to boiler high limit shutdowns and poor system performance.

Maintain 1" (24mm) clearance around all uninsulated hot water pipes.

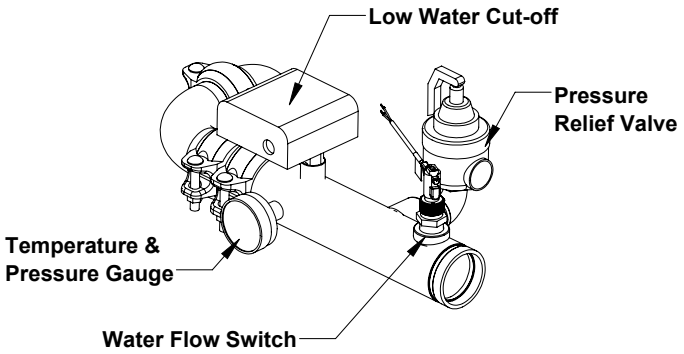

Figure 12: Factory Supplied Water Manifold

D. Temperature Rise and Heat Exchanger Head Loss

1. The heat exchanger adds pressure drop to the system which must be accounted for in the design of the piping configuration and pump selection.
2. For systems with glycol mixture, the flow rate specified in Table 21 will increase as specified in Table 25 due to the extra frictional loss introduced by the glycol. Size pump accordingly.
3. Strictly follow glycol manufacturer's guidelines and recommendations when adding glycol in the heating system.
4. The system should be designed to maintain the recommended water flow rate shown in Table 21 while never exceeding the range of absolute flow rates shown in Table 24. Exceeding the maximum water flow rates can cause pipe erosion, damage the flow switch, and allow unsafe operation.
   a. Maintaining sufficient flow through the boiler will help prevent the buildup of scale.

Table 21: Temperature rise, flow rate, and head loss

	Recommended Range															
Boiler Model	Delta 20 °F		Delta 25 °F		Delta 30 °F		Delta 35 °F		Delta 40 °F		Delta 45 °F		Delta 50 °F		Delta 55 °F	
	GPM	Head Loss (ft)	GPM	Head Loss (ft)	GPM	Head Loss (ft)	GPM	Head Loss (ft)	GPM	Head Loss (ft)	GPM	Head Loss (ft)	GPM	Head Loss (ft)	GPM	Head Loss (ft)
1000	97	11.1	78	7.8	65	5.9	55	4.6	49	3.7	43	3.1	40	2.6	35	2.3
1250	121	15.8	97	11.1	81	8.3	69	6.5	61	5.3	54	4.4	50	3.7	44	3.2
1500	146	15.3	116	10.8	97	8.1	83	6.3	73	5.1	65	4.2	60	3.6	53	3.1
2000	194	19.7	155	13.9	129	10.5	111	8.2	97	6.7	86	5.6	80	4.7	71	4.1
2500	242	15.4	194	11.3	161	8.9	138	7.2	121	6.1	107	5.2	97	4.6	88	4.0
3000	291	20	232	14.6	194	11.3	166	9.2	145	7.7	129	6.6	116	5.8	105	5.1
3500	339	14.4	271	10.0	226	7.6	194	6.1	170	5.2	150	4.5	135	4.0	123	3.7
4000	388	18.1	310	12.4	258	9.3	221	7.4	194	6.1	172	5.3	155	4.7	141	4.2

Required Flow = Output×1000/(500×ΔT), where flow rate is in GPM, output is in MBH, and ΔT is in ºF, Outputs are shown in Table 1.
This Boiler has a temperature rise limit of 55 °F

E. Standard Piping Components

1. **Pressure Relief Valve (Required)**

   a. The pressure relief valve must be installed with spindle in vertical position. Installation of the pressure relief valve must comply with ASME Boiler and Pressure Vessel Code, Section IV. For standard and optional pressure relief valve for specific boiler model refer to Table 2.

   b. If the pressure relief valve is to be replaced, the replacement valve must have a relief capacity equal or exceeding the minimum relief valve capacity shown on the heat exchanger ASME plate. Also, when replacing the pressure relief valve, verify the temperature and pressure gauge meets ASME requirements for the replacement pressure relief valve.

   c. Pipe the pressure relief valve discharge to a location where hot water or steam will not create hazard or property damage if the valve discharges. The end of the discharge pipe must terminate in an untreated pipe.

   d. If the pressure relief valve is not piped to a drain, it must terminate at least 6 in. (150mm) above the floor. Do not run pressure relief valve discharge pipe through an area prone to freezing. The termination of discharge piping must be in an area where it will not became plugged by debris.

2. **Drain Valves**

   A factory installed 3/4” NPT drain valve and connection is provided with the unit.

3. **Flow Switch (Factory Supplied)**

   This appliance is CSD-1 compliant and equipped with water flow switch and reset low water cut out box. A flow switch is required for forced circulation coil-type water boilers to prevent overheating and the heat exchanger failure in accordance with requirements of ASME Boiler and Pressure Vessel Code, Section IV, and ANSI/ASME CSD-1 “Controls and Safety Devices for Automatically Fired Boilers”.

4. **Circulator**

   Near boiler pump is required to maintain minimum flow requirements for proper operation of the boiler. It is the responsibility of the installer to size and install near boiler pump(s). Refer to Table 21 for boiler specific head losses.

5. **Expansion Tank (Required)**

   If this appliance is replacing an existing appliance with no other changes in the system, the old expansion tank can generally be reused. If the expansion tank must be replaced, consult the expansion tank manufacturer’s literature for proper sizing.

⚠ WARNING

Scald Hazard. Pressure relief valve discharge shall be piped in such a way to prevent or eliminate potential burn risk.

DO NOT pipe in any area where freezing could occur.

DO NOT install any shut-off valves, plugs, caps, or reducers in the discharge piping.

Discharge line shall be installed to allow complete drainage of both the valve and the line.

Consult local codes for proper discharge pipe arrangement.

Observe a minimum of 1/2 inch (12 mm) clearance around all uninsulated hot water piping.

6. **Fill Valve (Required)**

   Either manual (recommended) or automatic fill valve may be used.

NOTICE

If automatic refill is employed, a water meter must be added to evaluate the makeup water volume taken after initial fill and eliminate any water leakage as early as possible.

7. **Automatic Air Vent (Required)**

   At least one automatic air vent is required. Manual vents will usually be required in other parts of the system to remove air during initial fill.

8. **Y-strainer (Recommended)**

   A Y-strainer or equivalent strainer removes heating system debris from the hydronic systems and protects the heat exchanger. Install the strainer in the cold water connection piping between the tank and the appliance.

9. **Isolation Valves (Recommended)**

   Isolation valves are useful for servicing and stopping water flow in the case of failure. Full port ball valves are required.

10. **Flow Control Valve (Strongly Recommended)**

    The flow control valve prevents flow through the system unless the circulator is operating. Flow control valves are used to prevent gravity circulation in circulator zone systems through zones that are not calling for heat.

F. Water Quality and Treatments

1. The water directly in contact with the appliance must meet the requirements in this section. Failure to adhere to the water treatment requirements in this manual can cause damage not covered by warranty to the appliance, pumps, or other components in the system.
2. The heat exchanger and other pipping components will be subject to chemical effects when the system is filled with water. The quality of water used in the heating system is essential for the successful operation and longevity of the product. A successful water treatment plan will help to maintain efficiency, reduce the frequency of repair and/or replacement, and extend the working life of the boiler and other system equipment. If left untreated, poor water quality could cause a number of problems including, but not limited to, oxidation, scaling, corrosion, and fouling.
3. In order to develop an effective water treatment plan, it will be necessary to gain knowledge of the impurities dissolved in the water. Consult with a qualified industrial water treatment professional to establish a treatment plan. In addition, a periodic testing/sampling plan should be developed.
4. To minimize corrosion and scale effects, adhere to the water hardness levels specified in this section. Refer to Table 22 and Table 23 for recommended Corrosion/Scale inhibitors and treatment options.
   a. The water must have a hardness greater than 3 gpg (grains per US gallon) and less than 9 gpg.
   b. Water with a hardness of less than 80 ppm (5 gpg) can have a pH level that is corrosive.
   c. The pH of the water must be greater than 7.5 and less than 9.5. If the system contains aluminum parts, the pH must be less than 8.5.
5. Total Dissolved Solids (TDS) contribute to scale buildup.
   a. The combined TDS and water hardness cannot exceed 450 ppm.
   b. The TDS (in ppm) is determined by measuring the electrical conductivity (µS/cm) of the water and multiplying by a conversion factor (typically 0.65 for drinking water).
6. Chlorine and Chloride can be very corrosive to stainless steel. Ensure the level of chlorine is less than 5 ppm and the level of chloride is less than 150 ppm.

⚠ WARNING

This appliance is **not** designed for the heating of swimming pool water.

NOTICE

The heat exchanger is made from stainless steel tubular double coil having relatively narrow waterways. Once filled with water, it will be subject to the effects of corrosion. Failure to take the following precautions to minimize corrosion, and overheating could result in severe product damage.

Before connecting the appliance, insure the system is free of impurities, grease, sediment, construction dust, sand copper dust, and flux. Flush the system thoroughly and repeatedly, if needed.

Iron oxide (red oxide sludge Fe_2O_3) is produced by oxygenation. To minimize any oxygen presence in the system, the system must be air free and leak tight. Do not connect the boiler to radiant tubing without an oxygen barrier. Using automatic water refill is not recommended. However, if such refill is employed, a water meter must be added to evaluate the make up water volume taken after initial fill and eliminate any water leakage as early as possible.

Black oxide sludge (magnetite Fe_3O_4) forms as the result of continuous electrolytic corrosion in any system not protected by an inhibitor.

Scale deposit is made up of lime scale contained in most distributed water and settles over the warmest surfaces of the heat exchanger causing subsequent overheating and eventual failure.

Scale can form from high water hardness and slow water velocities. Failure to maintain the recommended water hardness and flow rate will result in a buildup of scale inside the heat exchanger.

Refer to the service and maintenance section of this manual for recommended heating system water treatment products.

7. Before connecting the boiler, insure the system is free of impurities, grease, sediment, construction dust, and any residual boiler water additives.
   a. Flush the system thoroughly and repeatedly, if needed, with clear water mixed with concentrated rinse agent to remove these contaminants completely.

⚠ CAUTION

Water temperatures over 140 °F (60 °C) greatly increase the affects of corrosive chemicals.
Chlorine and Chloride have different levels of corrosion effects on stainless steel. It is recommended for chlorine (Cl2) levels to be below 5ppm and chloride (Cl^-) levels to be below 150 ppm for 316 stainless steel.

G. Oxygen Contamination

1. Continuous addition of make-up water will constantly add oxygen to the system and lead to corrosion. Black oxide sludge (magnetite, Fe_3O_4) forms as a result of continuous electrolytic corrosion in any system unprotected by an inhibitor.
2. To minimize oxygen presence in the system, all system leaks must be repaired immediately. DO NOT connect the boiler to radiant tubing without an oxygen barrier.
3. There are many possible causes of oxygen contamination such as:
   a. Addition of excessive make-up water as a result of system leak
   b. Absorption through open tanks and fittings.
   c. Oxygen permeable materials in the distribution system.
4. In order to insure long product life, oxygen sources must be eliminated. This could be accomplished by taking the following measures:
   a. Repairing system leaks to eliminate the need for addition of make-up water.
   b. Eliminate and/or repair fittings which allow oxygen absorption.
   c. Use of non-permeable materials in the distribution system.
   d. Isolating the boiler from the system water using an indirect heat exchanger.
   e. Using properly designed air elimination devices in water piping.

NOTICE

The manufacturer's Standard Warranty does not cover boiler failure caused by oxygen contamination of boiler water or scale build-up.

Table 22: Corrosion/Scale Inhibitors and Removal Agents

Producers	Fernox	Sentinel	Sotin	ADEY
Inhibitors	Protector F1/Alphi 11	X100, X500	Sotin 212	MC1+
Noise reducer	-	X200	-	-
Universal Cleaner	Restorer	X300	-	-
Sludge remover	Protector F1, Cleaner F3	X400	Sotin 212	-
Antifreeze	Alphi 11	X500	-	-
Tightness	-	Leak Sealer F4	-	-

Table 23: Water Treatment Types

Treatment Type	Preventive	Corrective
Producer F1	X	
X100	X	X
X200	X	
X300		
X400		X
X500	X	X
Alphi 11	X	
Leaker Sealer F4	X	
Sotin 212		X
MC1+	X	

Table 24: Absolute Water Flow Rates

Model	Max Flow (GPM)	Min Flow (GPM)
1000	450	35
1250		44
1500		53
2000	600	71
2500	800	88
3000		105
3500		123
4000		141

NOTICE: This table represents the absolute max and min flow rates allowed and shall **not** be used to design the system or size the circulator.

Table 25: Flow Rates for Glycol Systems

System Glycol Concentration (%)	Increase Flow, (%)
50	24
30	14

Note: Total system water volume includes expansion tank(s) and reservoirs.

⚠ WARNING

When using Glycol products, all Glycol manufacturers' requirements, including rust inhibitors, must be adhered to. Maximum 50 % Glycol.

Do not use ethylene glycol in systems that can come in contact with domestic hot water, such as indirect water heaters.

Figure 13: Single Boiler, Primary/Secondary Piping

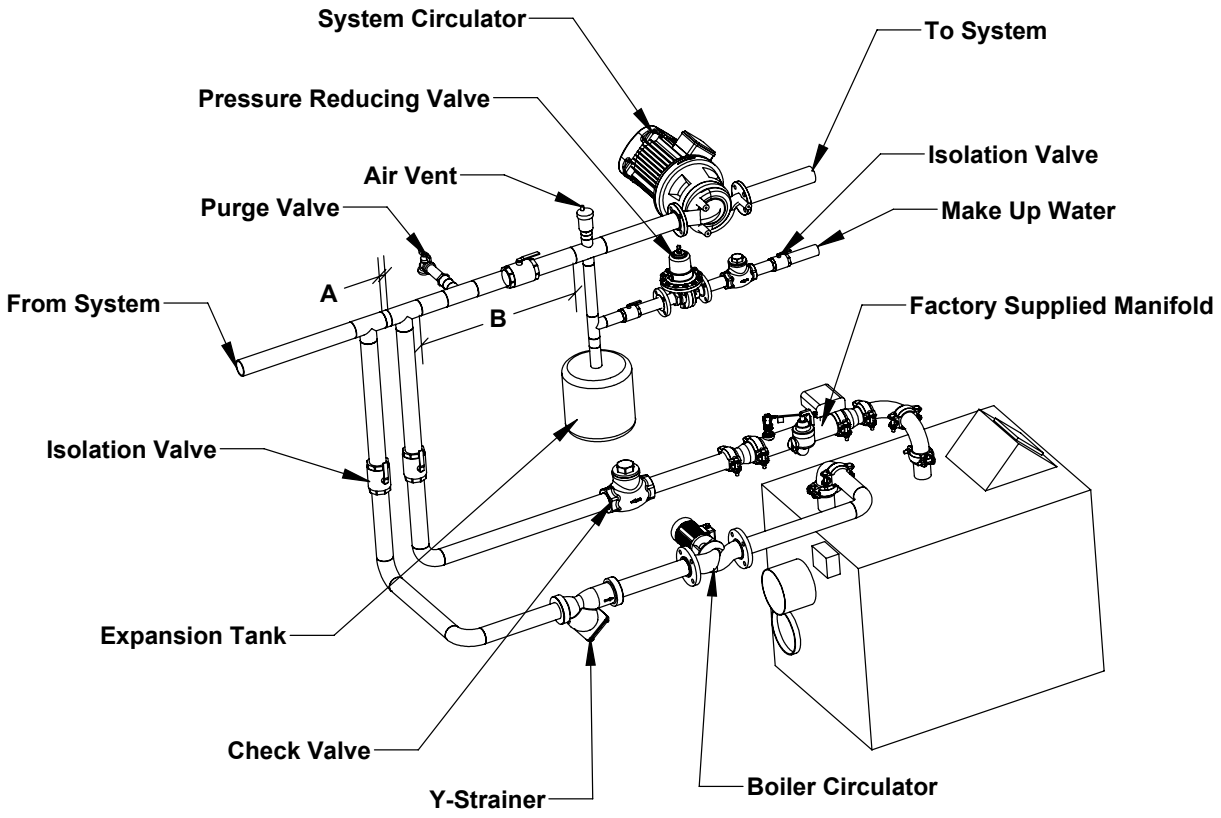

A. No more than 12 inches or 4 pipe diameters
B. At least 18" of straight pipe for convetional air scoop

CAUTION

1. These are suggested piping configurations. It is the installer's responsibility to conform to local codes and ordinances for additional requirements.
2. Pressure relief valve rating shall not exceed pressure rating of any component in the system.
3. Some piping components cannot be supported by the pipping. Refer to the manufactures' installation instructions.
4. It is the installers responsibility to select boiler piping configurations that provide the proper flow rates and performance for the boiler and indirect water heater.

Figure 14: Multiple Boiler, Primary/Secondary with Common Header Piping

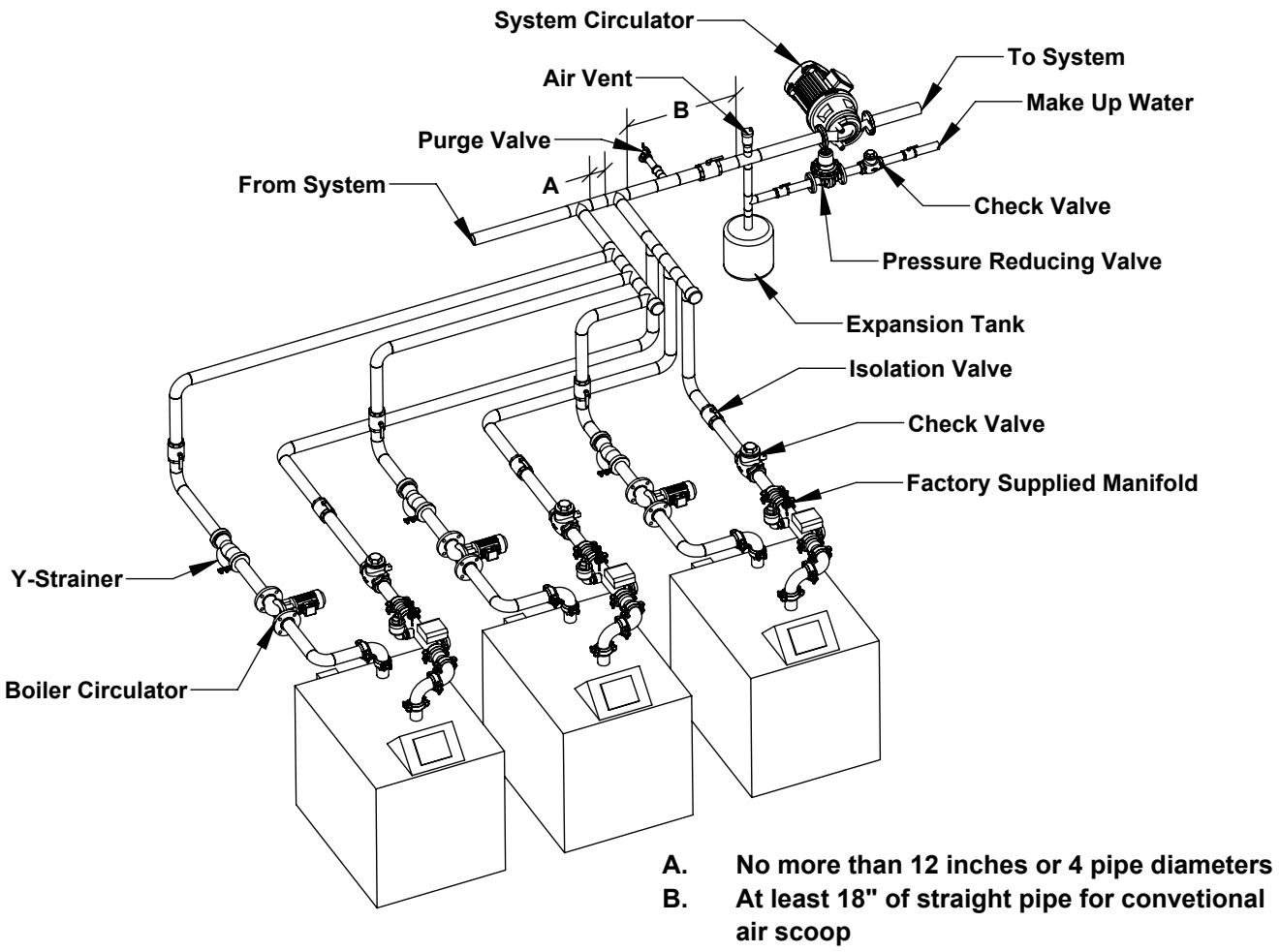

CAUTION

1. These are suggested piping configurations. It is the installer's responsibility to conform to local codes and ordinances for additional requirements.
2. Pressure relief valve rating shall not exceed pressure rating of any component in the system.
3. Some piping components cannot be supported by the pipping. Refer to the manufactures' installation instructions.
4. It is the installers responsibility to select boiler piping configurations that provide the proper flow rates and performance for the boiler and indirect water heater.
5. Erosion could occur if common piping is undersized.

Figure 15: Multiple Boiler, Primary Reverse-Return Piping

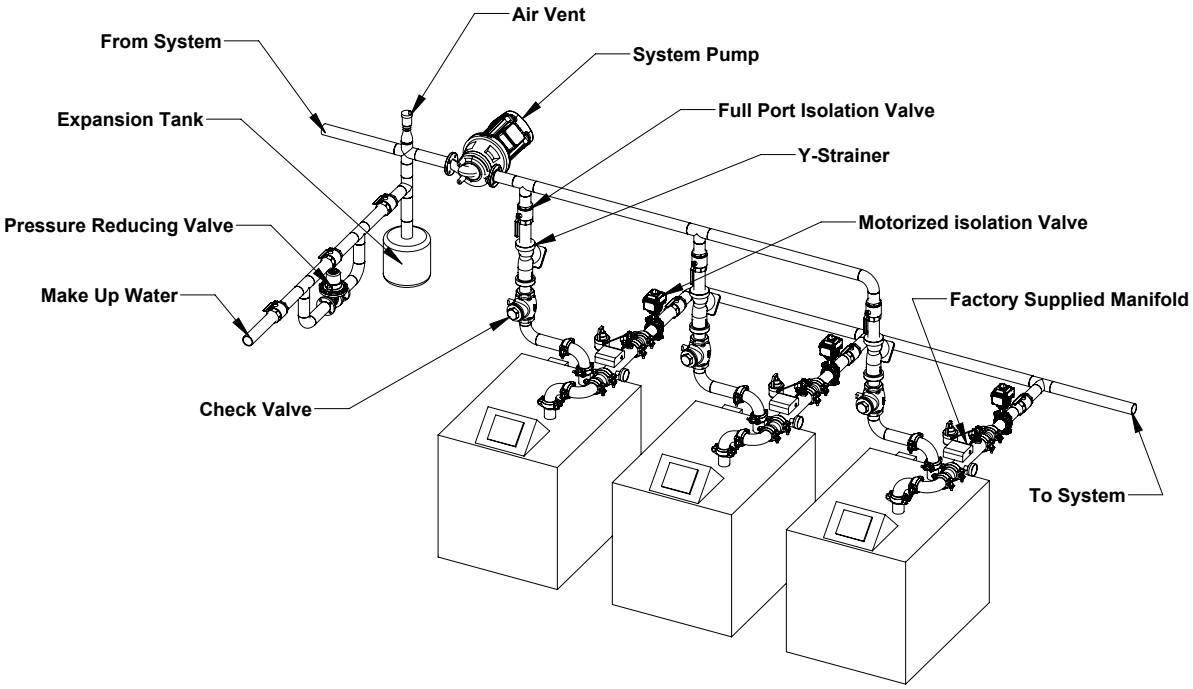

Figure 16: Single Boiler, Variable Primary Piping

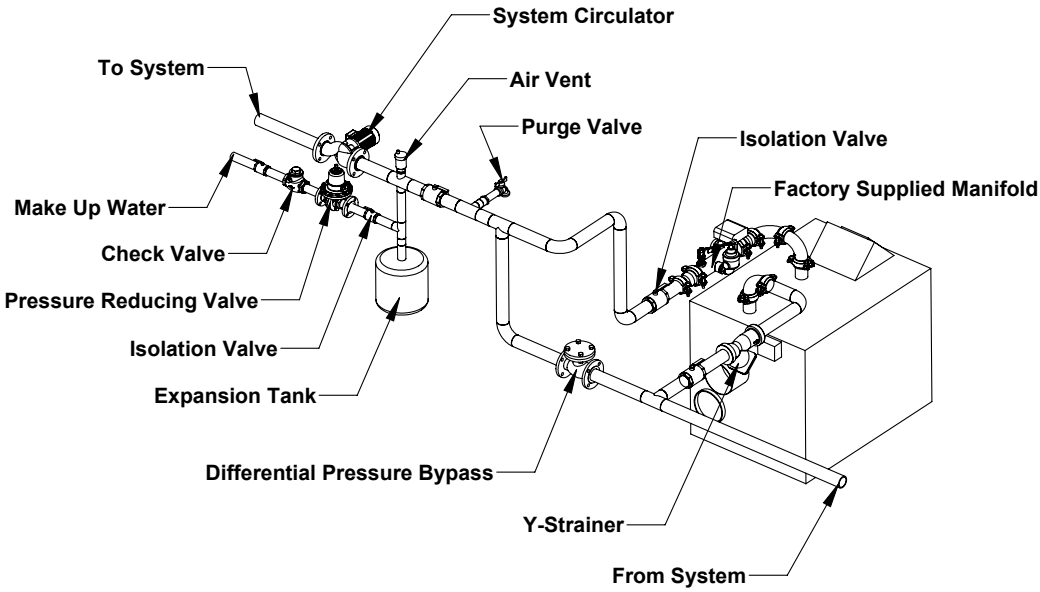

CAUTION

1. These are suggested piping configurations. It is the installer's responsibility to conform to local codes and ordinances for additional requirements.
2. Pressure relief valve rating shall not exceed pressure rating of any component in the system.
3. Some piping components cannot be supported by the pipping. Refer to the manufactures' installation instructions.
4. It is the installers responsibility to select boiler piping configurations that provide the proper flow rates and performance for the boiler and indirect water heater.
5. Erosion could occur if common piping is undersized.

Figure 17: Multiple Boiler, Primary Secondary Piping with Hydronic Separator

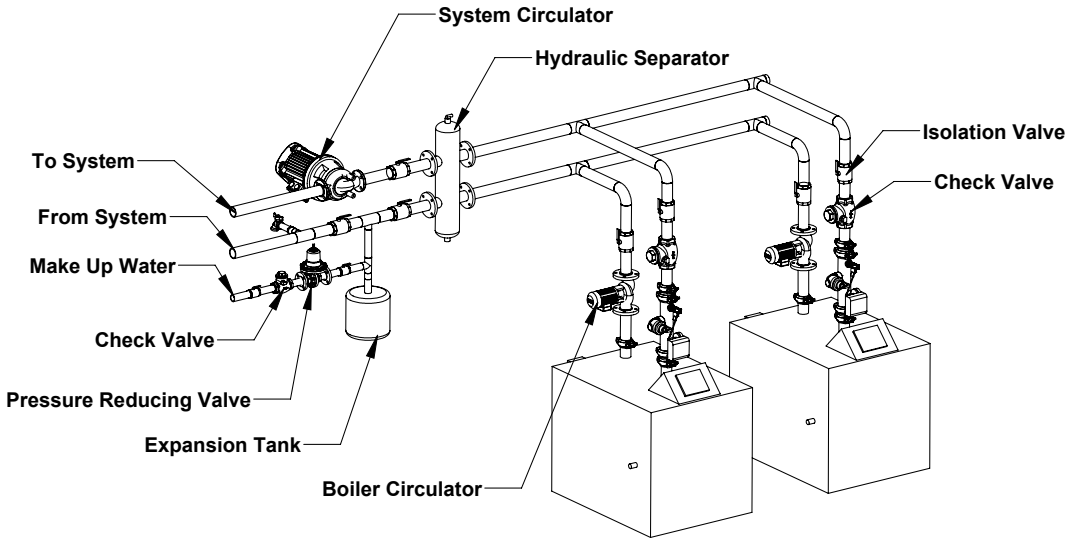

Figure 18: Single Boiler with Indirect Domestic Hot Water Heating

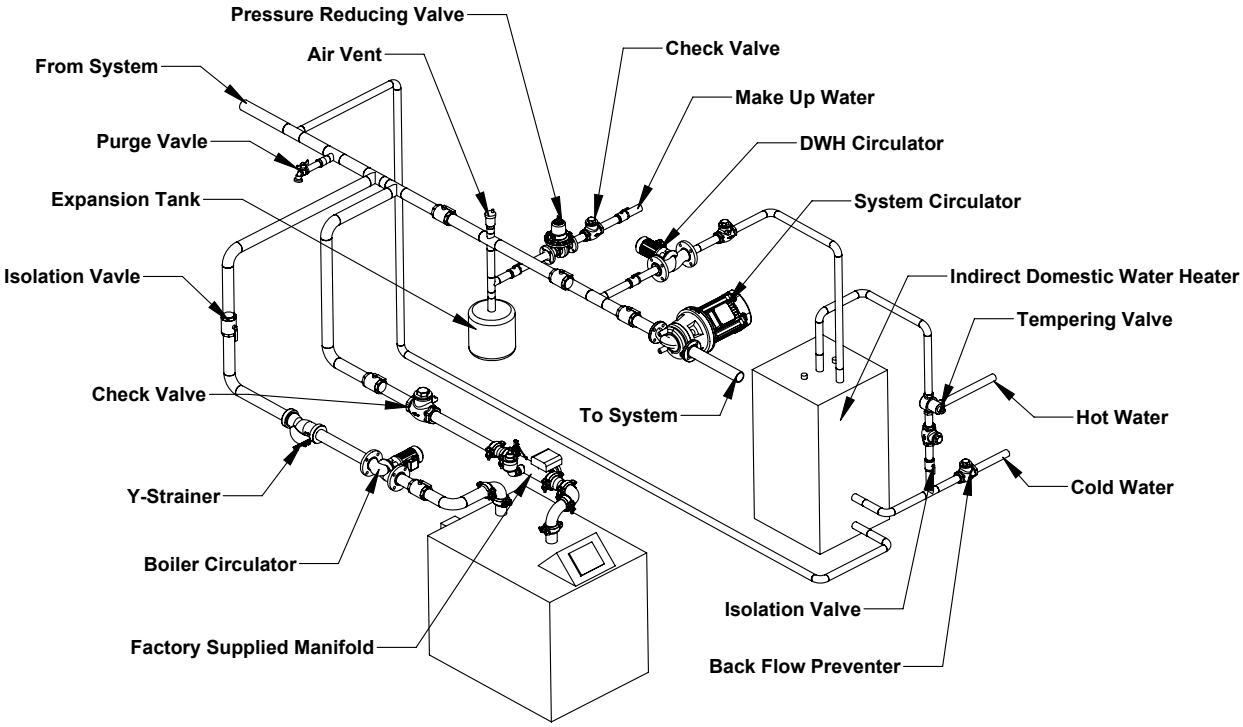

CAUTION

1. These are suggested piping configurations. It is the installer's responsibility to conform to local codes and ordinances for additional requirements.
2. Pressure relief valve rating shall not exceed pressure rating of any component in the system.
3. Some piping components cannot be supported by the pipping. Refer to the manufactures' installation instructions.
4. It is the installers responsibility to select boiler piping configurations that provide the proper flow rates and performance for the boiler and indirect water heater.
5. Erosion could occur if common piping is undersized.

XI. Hot Water Supply Boiler Water Piping

This Section of the Manual covers the Hot Water Supply Boiler used for applications other than space heating where potable water is being heated directly.

The AMP Hot Water Supply Boiler (Models AMPW 2500 - AMPW 4000) is designed for heating potable water. This Product will operate most efficiently and reliably when paired with one or more storage tanks.

A. General Piping Guidelines

The following steps are general guidelines for installing in a hot water supply system. The installer is responsible for complying with local codes.

1. The cold water return line shall be connected to the inlet of the appliance labeled "Return".
2. The hot water supply line shall be connected to the outlet manifold of the appliance shown in Figure 19.
3. The system cold water supply line shall include a backflow preventer/check valve and properly sized expansion tank for the capacity of the system.
4. A drain valve should be installed at the lowest point in the system
5. This is a condensing appliance. The return water and cold water supply should be piped to the primary loop going into the appliance.
6. Circulation pump must be installed in the primary piping between the tank and the appliance.

B. Factory Supplied Outlet Manifold (W)

1. A Temperature and Pressure relief valve is included with every W model. If the Relief valve is shipped loose, install it to the outlet manifold as shown in Figure 19.
2. When piping the appliance to the system, do not install an elbow closer than 5 pipe diameters from the flow switch.
3. When adapting the grooved outlet to the system piping, use a coupling that conforms to local codes and ordinances. Victaulic 107N couplings are available from factory.

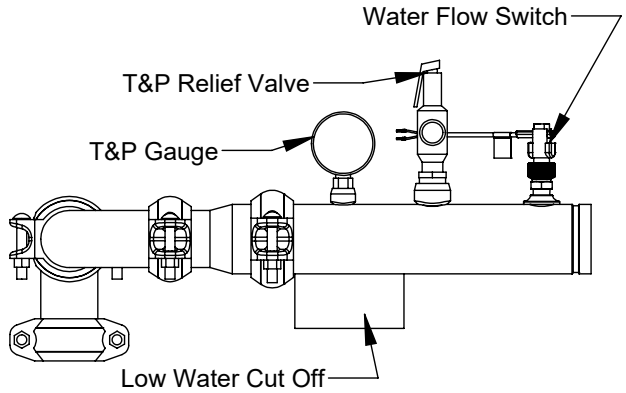

Figure 19: Hot Water Outlet Manifold (W)

⚠ WARNING

Failure to properly pipe appliance may result in improper operation and damage.

Install the appliance so that the gas ignition system components are protected from water (dripping, spraying, rain, etc.) during appliance operation and service (circulatory replacement, cleaning, etc.).

Contamination of the water by corrosive chemicals will cause corrosion of the steel components, and can lead to appliance failure. The manufacturer's Standard Warranty does not cover problems caused by contamination of supply water.

Installation is not complete unless a safety relief valve is installed in the outlet manifold of the appliance or the hot water piping shortly downstream of the appliance.

Failure to maintain the flow through the appliance within the specified limits could result in erratic operation or premature failure.

The circulator shall be sized properly based on the pressure drop of the entire loop and the desired temperature rise.

Maintain 1” (24mm) clearance around all uninsulated hot water pipes. The piping going into the cold water inlet of the appliance can still be hot from circulating the water in the tank.

C. Standard Piping Components

1. Circulation Piping

The circulation or primary piping includes both pipelines connecting the appliance to the tank. The pipe diameter for 1 appliance should be sized no smaller than what is recommended in Table 30.

The inlet and outlet connections are grooved Victaulic pipe connections. The Victaulic rigid coupling 107N QuickVic™ is recommended.

2. Temperature and Pressure Relief Valve

a. This appliance is shipped with a temperature and pressure safety relief valve complying with the standard for relief valves for hot water supply systems ANSI Z21.22 • CSA 4.4 installed on the hot water outlet manifold.

b. The temperature and pressure (T&P) relief valve must be installed with the spindle in a vertical position. Installation of the relief valve must comply with ASME Boiler and Pressure Vessel Code, Section IV.

c. If the T&P relief valve is to be replaced, the replacement valve must have a relief capacity equal or exceeding the minimum relief valve capacity shown on the heat exchanger ASME plate. Also, when replacing the T&P relief valve, verify the temperature and pressure gauge meets ASME requirements for the replacement relief valve.

d. Pipe the T&P relief valve discharge to a location where hot water or steam will not create hazard or property damage if the valve discharges. The end of the discharge pipe must terminate in an untreated pipe.

e. If the T&P relief valve is not piped to a drain, it must terminate at least 6 in. (150mm) above the floor. Do not run relief valve discharge pipe through an area prone to freezing. The termination of discharge piping must be in an area where it will not became plugged by debris.

f. The storage tank requires its own T&P relief valve installed according to the manufacturers instructions.

3. Drain Valves

A factory installed 3/4" NPT drain valve and connection is provided with the unit.

4. Flow Switch (Factory Supplied)

This appliance is CSD-1 compliant and equipped with water flow switch and reset low water cut out box. A flow switch is required for forced circulation coil-type water boilers to prevent overheating and the heat exchanger failure in accordance with requirements of ASME Boiler and Pressure Vessel Code, Section IV, and ANSI/ASME CSD-1 "Controls and Safety Devices for Automatically Fired Boilers".

5. Circulator Pump (Required)

A pump is required to circulate the water between the storage tank and the appliance. It is the responsibility of the installer to size and install the circulator for the proper flow rate and temperature rise. Refer to Table 29 and Table 30.

6. Expansion Tank (Required)

If this appliance is replacing an existing appliance with no other changes in the system, the old expansion tank can generally be reused. If the expansion tank must be replaced, consult the expansion tank manufacturer's literature for proper sizing.

⚠ WARNING

Temperature and Pressure Relief Valve

Scald Hazard. Safety relief valve discharge shall be piped in such a way to prevent or eliminate potential burn risk.

DO NOT pipe in any area where freezing could occur.

DO NOT install any shut-off valves, plugs, caps, or reducers in the discharge piping.

Discharge line shall be installed to allow complete drainage of both the valve and the line.

Consult local codes for proper discharge pipe arrangement.

Observe a minimum of 1/2 inch (12 mm) clearance around all uninsulated hot water piping.

7. Y-strainer (Recommended)

A Y-strainer or equivalent strainer removes heating system debris from the hydronic system and protects the heat exchanger. Install the strainer in the primary piping going to the inlet of the appliance.

8. Isolation Valves (Recommended)

Isolation valves are useful for servicing and stopping water flow in the case of failure. Full port ball valves are required.

9. Mixing Valve/Anti-scald Valve (Recommended)

A mixing valve is recommended when storing water at scalding hot temperatures.

10. Recirculation Filter (Recommended)

A Recirculation filter can capture suspended solids in the system and help prevent the effects of erosion corrosion.

D. Scalding

This appliance can supply water at scalding temperatures to faucets and other fixtures in the system. Mixing valves are recommended to maintain the supply water at safe temperatures.

1. Maintaining the storage tank above 140 ºF and using a mixing valve can increase the amount of hot water available and help prevent the growth of water borne bacteria like Legionella.

a. Mixing valves can be installed at the outlet of storage tank or at other zones or fixtures in the system.

2. When appliances such as dishwashers or clothes washers are used in a domestic hot water system that require increased temperatures, two hot water supply's can be set up as shown in Figure 21.
3. Scalding can occur at temperatures above 125 ºF. Young Children, disabled, and elderly are most at risk of hot water scalding.

E. Water Quality

1. To minimize corrosion and scale effects, adhere to the water quality requirements in Table 28.
   a. If the water hardness is higher than 257 ppm (15 gpg), a water softener should be used.
   b. Water with a hardness of less than 80 ppm (5 gpg) can have a pH level that is corrosive.
2. Total Dissolved Solids (TDS) contribute to scale buildup. If the TDS or combined water hardness and TDS exceeds 450 ppm, the water needs to be heated indirectly.
   a. The TDS (in ppm) is determined by measuring the electrical conductivity (µS/cm) of the water and multiplying by a conversion factor (typically 0.65 for drinking water).
3. Chlorine and Chloride can be very corrosive to stainless steel. Ensure the level of chlorine is less than 5 ppm and the level of chloride is less than 150 ppm.

⚠ WARNING

This appliance is **not** designed for the heating of swimming pool water.

4. Before connecting the appliance, insure the system is free of impurities, grease, sediment, construction dust, and anything that could be harmful to the appliance or humans.
   a. Flush the system thoroughly and repeatedly if needed.

⚠ DANGER

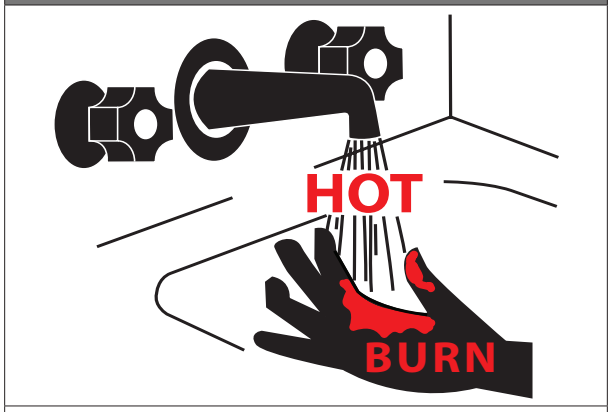

- Water temperatures over 125 ºF can cause severe burns instantly or death from scalds.
- Children, disabled, and elderly are at highest risk of scalding.
- Feel water before bathing or showering.
- For domestic hot water supply, adjust the high limit control on the appliance or use tempering (mixing) valves to limit the supply temperature below 125 ºF.

Table 26: Approximate Time for Scalding

Temperature (°F)	Time
120	More than 5 minutes
125	1-1/2 to 2 minutes
130	About 30 seconds
135	About 10 seconds
140	Less than 5 seconds
145	Less than 3 seconds
150	About 1-1/2 seconds
155	About 1 second

Table 27: Operating Water Flow Rates

	Flow Rate (GPM)	
Model	**Hardness level, 4-12 gpg**	**Hardness level, 12-15 gpg**
1000	110.5	147.3
1250	110.5	147.3
1500	122.8	204.6
2000	153.5	311.1
2500	239.4	319.2
3000	239.4	319.2
3500	294.7	392.9
4000	294.7	392.9

Table 28: Water Quality Requirements

Quality Parameter	Min.	Max.
Water Hardness (ppm)	80	257
Total Dissolved Solids (ppm)	100	450
Chlorine (ppm)	-	5
Chloride (ppm)	-	150
pH (cold)	6.0	8.5
Notes: The combined water hardness and TDS cannot exceed 450 ppm. 1 grain per gallon = 17.1 ppm		

⚠ CAUTION

Water temperatures over 140 °F (60 °C) greatly increase the affects of corrosive chemicals.

Chlorine and Chloride have different levels of corrosion effects on stainless steel. It is recommended for chlorine (Cl_2) levels to be below 5ppm and chloride (Cl^-) levels to be below 150 ppm for 316 stainless steel.

NOTICE

The heat exchanger is made from stainless steel tubular double coil having relatively narrow waterways. Once filled with water, it will be subject to the effects of corrosion. Failure to take the following precautions to minimize corrosion, and overheating could result in severe product damage.

Before connecting the appliance, insure the system is free of impurities, grease, sediment, construction dust, sand copper dust, and flux. Flush the system thoroughly and repeatedly, if needed.

Scale deposit is made up of lime scale contained in most distributed water and settles over the warmest surfaces of the heat exchanger causing subsequent overheating and eventual failure.

Scale can form from high water hardness and slow water velocities. Failure to maintain the recommended water hardness and flow rate will result in a buildup of scale inside the heat exchanger.

F. Temperature Rise and Heat Exchanger Head Loss

1. The heat exchanger adds pressure drop to the system which must be accounted for in the design of the piping configuration and pump selection.
2. The system must be designed to maintain the flow rate within the recommended range shown in Table 29. Also see Table 27 and Table 24 for more flow rate requirements.

Table 29: Temperature Rise, Flow Rate, and Head Loss

W Model	Recommended Range															
	Delta 20 °F		Delta 25 °F		Delta 30 °F		Delta 35 °F		Delta 40 °F		Delta 45 °F		Delta 50 °F		Delta 55 °F	
	GPM	Head Loss (ft)	GPM	Head Loss (ft)	GPM	Head Loss (ft)	GPM	Head Loss (ft)	GPM	Head Loss (ft)	GPM	Head Loss (ft)	GPM	Head Loss (ft)	GPM	Head Loss (ft)
1000	98	11.3	78	8	65	6	56	4.7	49	3.8	44	3.1	39	2.7	36	2.3
1250	123	16.1	98	11.3	82	8.5	70	6.6	61	5.4	54	4.5	49	3.8	45	3.3
1500	147	15.6	118	10.9	98	8.2	84	6.4	74	5.2	65	4.3	59	3.7	53	3.1
2000	196	20.1	157	14.2	131	10.6	112	8.4	98	6.8	87	5.6	78	4.8	71	4.1
2500	245	15.7	196	11.5	163	9	140	7.3	123	6.2	109	5.3	98	4.6	89	4.1
3000	294	20.3	235	14.8	196	11.5	168	9.3	147	7.8	131	6.7	118	5.8	107	5.2
3500	343	14.6	274	10.2	229	7.7	196	6.2	172	5.2	152	4.6	137	4.1	125	3.7
4000	392	18.4	314	12.6	261	9.4	224	7.5	196	6.2	174	5.3	157	4.7	143	4.2

Required Flow = Output×1000/(500×ΔT), where flow rate is in GPM, output is in MBH, and ΔT is in ºF, Outputs are shown in Table 1.

G. Pump Selection

A Circulation pump is a required component for complete installation of this appliance. Choosing the appropriate pump is critical for the functionality, safe operation, and longevity of the appliance. Pumps should be sized for each particular installation based on the required flow rate, water hardness, and total pressure drop in the primary loop between the tank and the boiler.

1. Sizing a sufficient pump will ensure the desired temperature rise and meet the minimum flow rate requirements. Lower flow rates will allow build up of scale and cause more stress on the heat exchanger.
   a. If the flow rate is too high and the temperature rise is too low, the flow rate can be decreased by adding a restriction in the loop.
      i. Install a ball valve or globe valve (recommended) in the outlet side of the primary piping.
      ii. With the boiler at its maximum input rate (high fire), slowly adjust the globe valve until the temperature rise is within the recommended range shown in Table 29.
      iii. Water velocities too high may cause erosion within the tubes of the heat exchanger or the primary piping. Failure to adjust the flow rate to the specified values or use the appropriate pipe size can cause non-warrantable damage.
2. The wetted materials of the pump must be suitable for potable water. Look for bronze or stainless steel pump housings.

Table 30: Pumps, Pipe Size, and Total Head Loss

W Model	Nominal Pipe Size (in)	Water Hardness (gpg)	Flow Rate (GPM)	Heat Ex. loss (ft of head)	Total Loss (ft of head)	Optional Grundfos* Pump (TS #)	Temperature Rise (°F)
1000	3	4-12	99	11	17	109695-02	20
	4	12-15	132	18	21	109695-04	15
1250	3	4-12	99	11	17	109695-02	24
	4	12-15	132	18	21	109695-04	18
1500	3	4-12	110	10	17	109695-02	26
	4	12-15	147	16	20	109695-04	20
2000	3	4-12	138	12	23	109695-04	28
	4	12-15	183	18	23	109695-05	21
2500	4	4-12	214	13	20	109695-05	23
	6	12-15	285	21	23	110025-01	17
3000	4	4-12	214	13	20	109695-05	27
	6	12-15	285	21	23	110025-01	20
3500	4	4-12	280	11	24	110025-01	24
	6	12-15	372	18	22	110025-01	18
4000	4	4-12	280	11	24	110025-01	28
	6	12-15	372	18	22	110025-01	21

NOTE: The total loss includes 50 ft of pipe, 8 elbows, and 4 Valves.
*Grundfos MAGNA1 pumps

NOTICE It is the installer's or system designer's responsibility to account for differences in the circulation loop. Length, pipe diameter, elbows, and valves all contribute to the total pressure drop in the loop.

Figure 20: Single Appliance, Single Tank

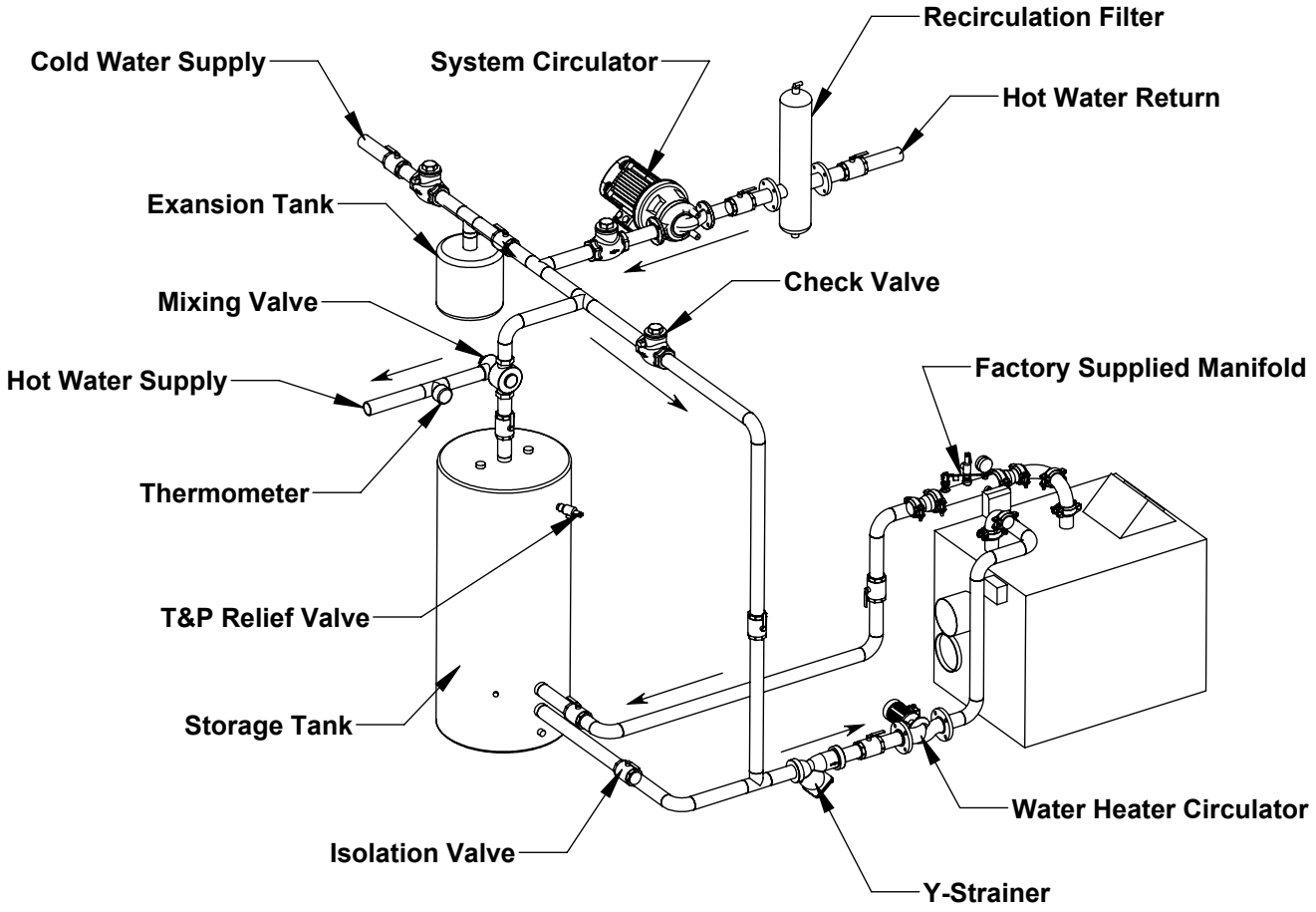

CAUTION

1. These are suggested piping configurations. It is the installer's responsibility to conform to local codes and ordinances for additional requirements.
2. Pressure relief valve rating shall not exceed pressure rating of any component in the system.
3. Some piping components cannot be supported by the pipping. Refer to the manufactures' installation instructions.
4. It is the installers responsibility to select boiler piping configurations that provide the proper flow rates and performance for the boiler and indirect water heater.

Figure 21: Two Temperatures, Single Appliance, Single Tank

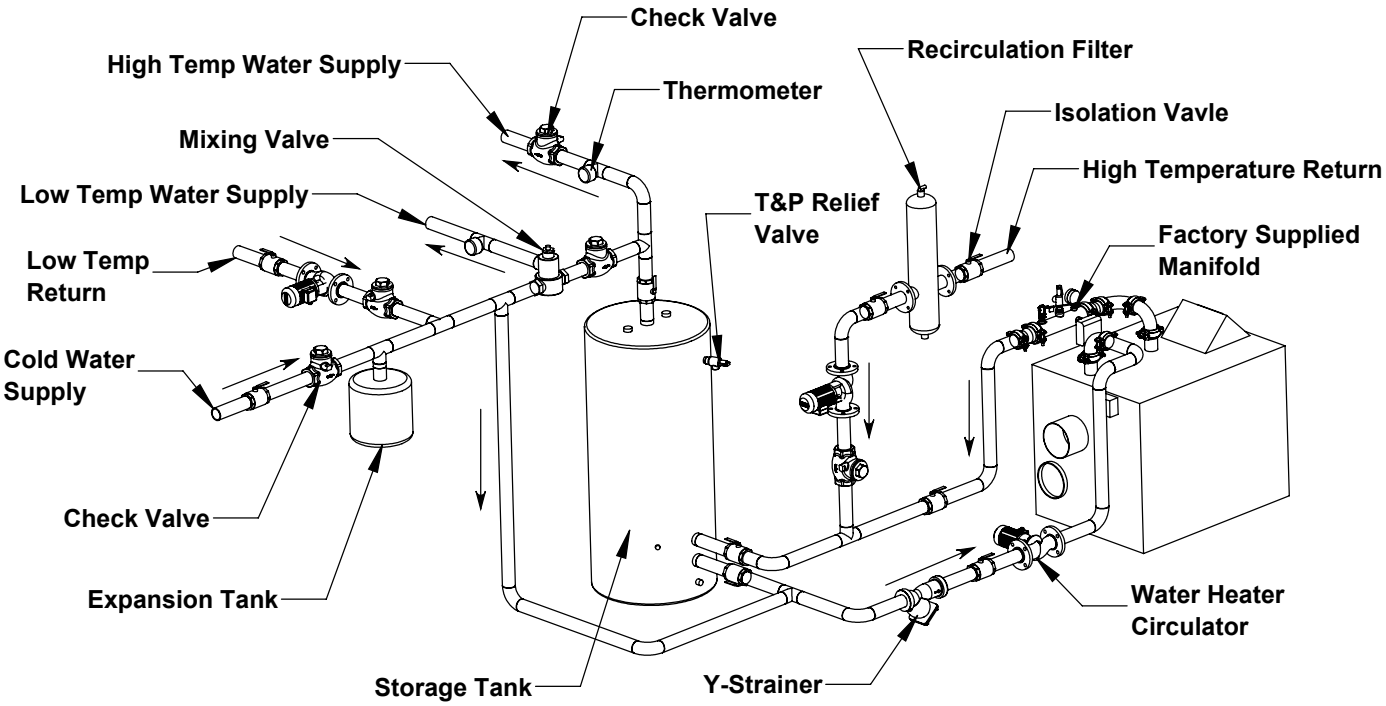

CAUTION

1. These are suggested piping configurations. It is the installer's responsibility to conform to local codes and ordinances for additional requirements.
2. Pressure relief valve rating shall not exceed pressure rating of any component in the system.
3. Some piping components cannot be supported by the pipping. Refer to the manufactures' installation instructions.
4. It is the installers responsibility to select boiler piping configurations that provide the proper flow rates and performance for the boiler and indirect water heater.

Figure 22: Single Appliance, Two Tanks

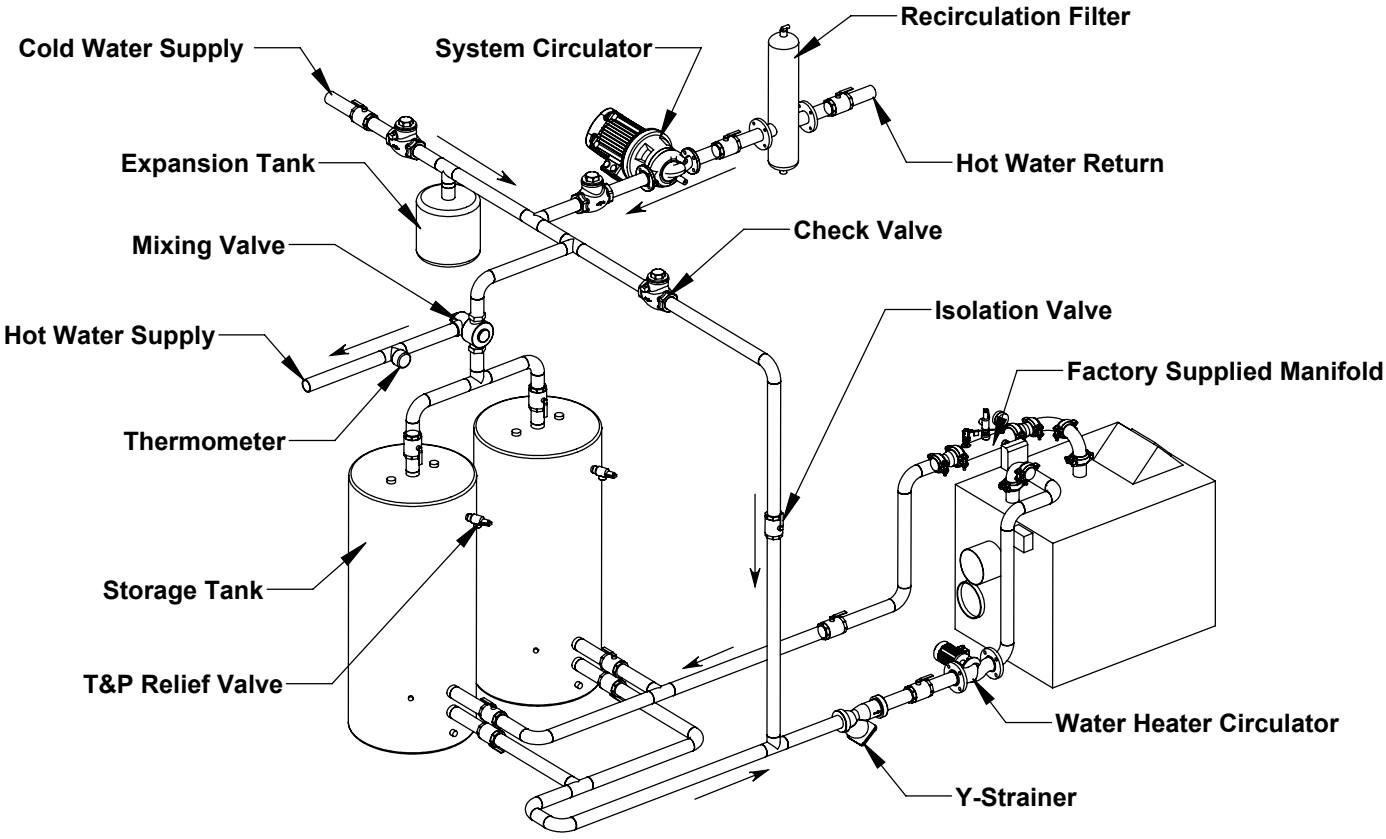

CAUTION

1. These are suggested piping configurations. It is the installer's responsibility to conform to local codes and ordinances for additional requirements.
2. Pressure relief valve rating shall not exceed pressure rating of any component in the system.
3. Some piping components cannot be supported by the pipping. Refer to the manufactures' installation instructions.
4. It is the installers responsibility to select boiler piping configurations that provide the proper flow rates and performance for the boiler and indirect water heater.

Figure 23: Two Appliances, Single Tank

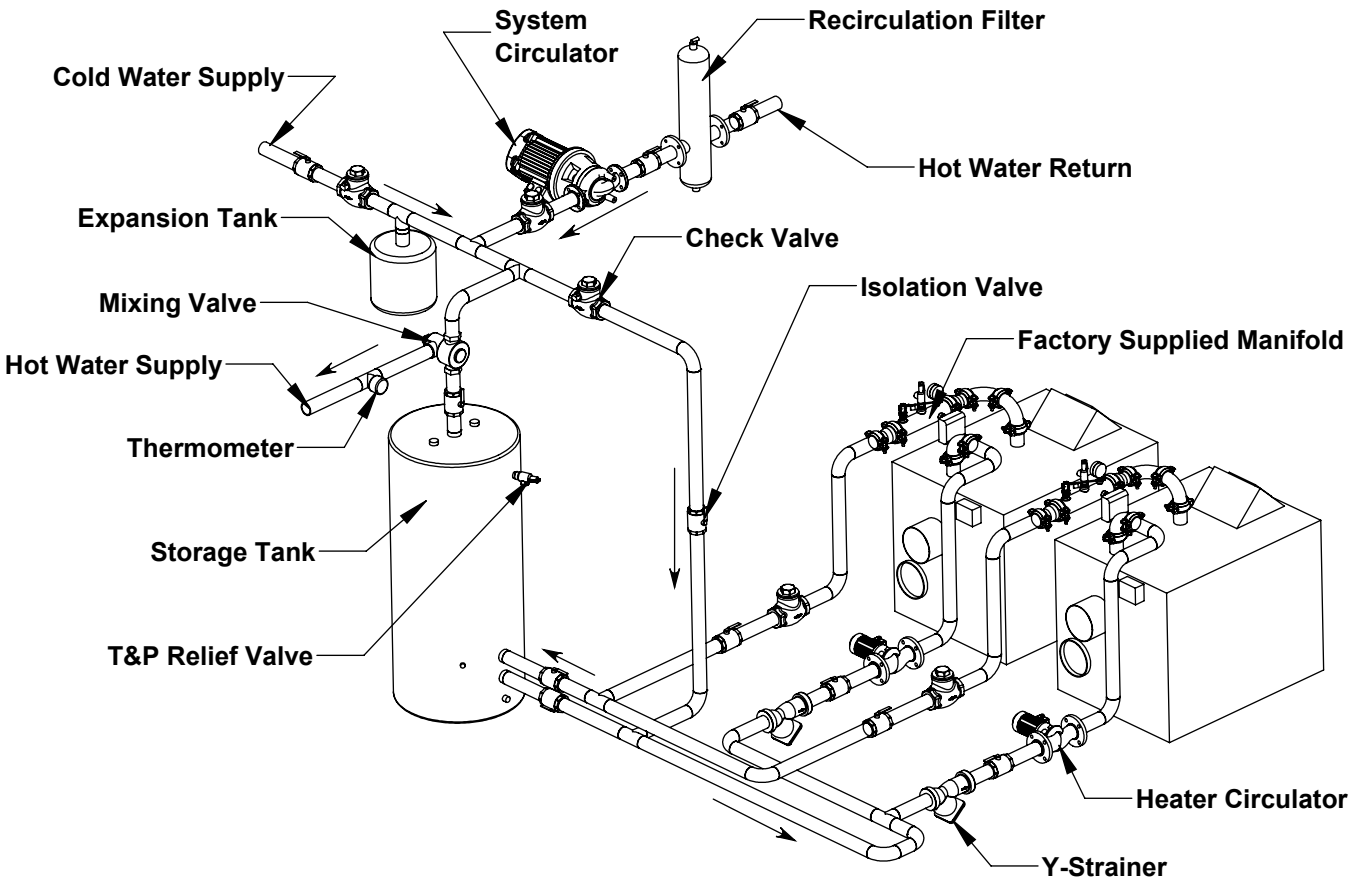

Table 31: Required Common Piping Sizes for Multiple Appliances

W Model	Number of Appliances				
	2	3	4	5	6
1000	5"	6"	8"	8"	10"
1250	5"	6"	8"	8"	10"
1500	6"	6"	8"	8"	10"
2000	6"	8"	10"	10"	10"
2500	8"	10"	10"	12"	12"
3000	8"	10"	10"	12"	12"
3500	10"	10"	12"	14"	14"
4000	10"	10"	12"	14"	14"
Note: Nominal pipe sizes are noted. Based on type L copper pipe					

CAUTION

1. These are suggested piping configurations. It is the installer's responsibility to conform to local codes and ordinances for additional requirements.
2. Pressure relief valve rating shall not exceed pressure rating of any component in the system.
3. Some piping components cannot be supported by the pipping. Refer to the manufactures' installation instructions.
4. It is the installers responsibility to select boiler piping configurations that provide the proper flow rates and performance for the boiler and indirect water heater.
5. Erosion could occur if common piping is undersized.

Figure 24: Two Appliances, Two Tanks

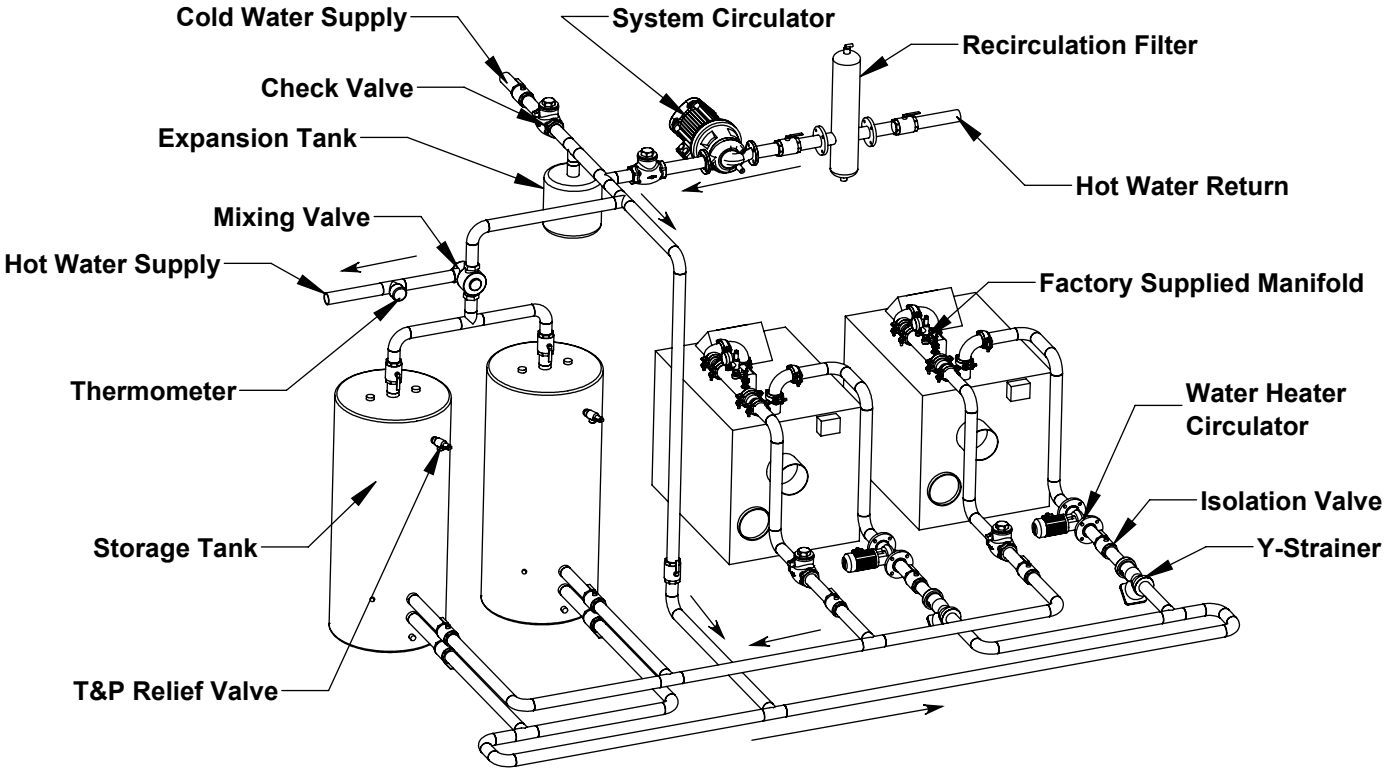

Required Common Piping Sizes for Multiple Appliances

W Model	Number of Appliances				
	2	3	4	5	6
1000	5"	6"	8"	8"	10"
1250	5"	6"	8"	8"	10"
1500	6"	6"	8"	8"	10"
2000	6"	8"	10"	10"	10"
2500	8"	10"	10"	12"	12"
3000	8"	10"	10"	12"	12"
3500	10"	10"	12"	14"	14"
4000	10"	10"	12"	14"	14"
Note: Nominal pipe sizes are noted. Based on type L copper pipe.					

CAUTION

1. These are suggested piping configurations. It is the installer's responsibility to conform to local codes and ordinances for additional requirements.
2. Pressure relief valve rating shall not exceed pressure rating of any component in the system.
3. Some piping components cannot be supported by the pipping. Refer to the manufactures' installation instructions.
4. It is the installers responsibility to select boiler piping configurations that provide the proper flow rates and performance for the boiler and indirect water heater.
5. Erosion could occur if common piping is undersized.

XII. Gas Piping

A. Guidelines and Requirements

All installation must conform to the *National Fuel Gas Code ANSI Z223.1/NFPA54,* and/or local codes. In Canada, installation must conform to the latest edition of *CSA B149.1 National Gas and Propane Gas Installation Code*, and/or local codes.

Safe operation of the appliance requires properly sized gas supply piping. Design gas piping system to provide adequate gas supply to the appliance. Account for existing and expected future gas utilization equipments such as boilers and cooking equipment.

1. First verify that the appliance is supplied with the type of gas specified on the rating plate.
2. Account for pressure drop from the point of delivery to the appliance. The maximum allowable system pressure is ½ psig (14 in. wc). Refer to Table 35 for model specific gas pressures and gas connection sizes.
3. If the gas supply pressure is higher than 14 in. wc, An additional field supplied pressure regulator will be required.
4. For length of piping and number of fittings refer to and Table 32 for maximum capacity of Schedule 40 pipe. Table 33 lists equivalent pipe length for standard fittings.
5. Gas piping systems for gas specific gravity of 0.60 can be sized directly from Table 32 unless authority having jurisdiction specifies a gravity factor be applied. For other specific gravities, apply gravity factor from Table 34. If exact specific gravity is not shown choose next higher value.
6. A sediment trap must be provided upstream of the main gas valve. (Included on models with vertical gas train connections)
7. All threaded joints should be coated with piping compound resistant to action of liquefied petroleum gas.
8. The appliance and its gas connection must be leak tested before placing it in operation.
   a. To protect the gas valve when testing over 1/2 psig (3.4 kPa), the appliance and its individual shutoff valve must be disconnected from gas supply piping. For testing at 1/2 psig (3.4 kPa) or less, isolate the appliance from gas supply piping by closing the manual shutoff valve on the appliance.
   b. Locate leaks using approved combustible gas non-corrosive leak detector solution.
9. The incoming gas pressure can be measured at the pressure tapping on the manual ball valve.
10. If the high or low gas pressure switch tripped, it must be manually reset before the appliance can be restarted. (See Figure 26)
11. Gas piping shall be supported by fixed hangers or stands and not by the appliance.
12. Purge all air from gas lines.
13. Install manual shutoff valve in accordance with state and local requirements.

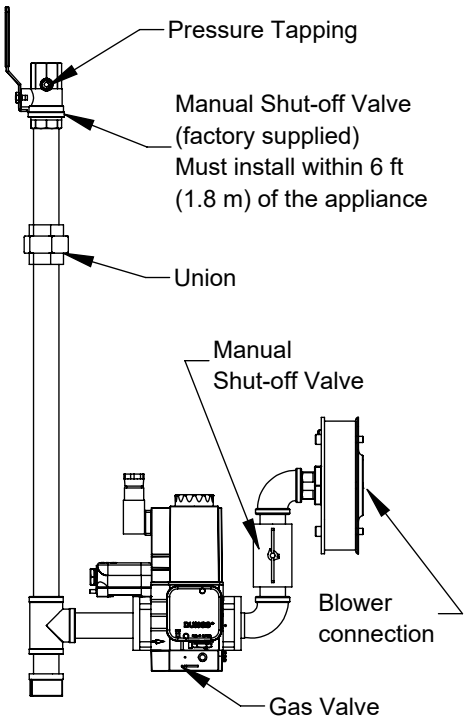

Figure 25: Gas Train Components

NOTICE

Venting of Gas Train Components: The MBC (gas valve) has an internal factory installed vent limiter per ANSI Z21.18/ CSA 6.3. Venting is required unless otherwise accepted by the authority having jurisdiction.
The high and low gas pressure switches incorporate a vent limiter as per UL 353 and limits the escape of gas to less than 1.0 CFH at 7 PSI if the internal diaphragm ruptures.
Locate the field supplied gas pressure regulator a minimum of 10 ft from the appliance with no more than 1 elbow in-between.

Table 32: Maximum capacity of schedule 40 black pipe in CFH*

Natural Gas, Inlet Pressure 14.0 in wc (3.4 kPa)or less; 0.5 in wc (0.12 kPa) Pressure Drop											
Nominal Pipe Size (In)	Inside Diameter (In)	Length of Pipe (Ft)									
		10	20	30	40	50	60	70	80	90	100
½	0.622	172	118	95	81	72	65	60	56	52	50
¾	0.824	360	247	199	170	151	137	126	117	110	104
1	1.049	678	466	374	320	284	257	237	220	207	195
1¼	1.380	1390	957	768	657	583	528	486	452	424	400
1½	1.610	2090	1430	1150	985	873	791	728	677	635	600
2	2.067	4020	2760	2220	1900	1680	1520	1400	1300	1220	1160
2½	2.469	6400	4400	3530	3020	2680	2430	2230	2080	1950	1840
3	3.068	11300	7780	6250	5350	4740	4290	3950	3674	3450	3260
*1 CFH of Natural Gas is approximately equal to 1 MBH; contact your gas suppliers for the actual heating value of your gas.											

Propane Gas, Inlet Pressure 11.0 in wc (2.7 kPa); 0.5 in wc (0.12 kPa) Pressure Drop											
Nominal Pipe Size (In)	Inside Diameter (In)	Length of Pipe (Ft)									
		10	20	30	40	50	60	70	80	90	100
½	0.622	116	80	64	55	48	44	40	38	35	33
¾	0.824	242	166	134	114	101	92	85	79	74	70
1	1.049	456	314	252	215	191	173	159	148	139	131
1¼	1.380	937	644	517	442	392	355	327	304	285	269
1½	1.610	1403	964	775	663	588	532	490	456	427	404
2	2.067	2703	1858	1492	1277	1131	1025	943	877	823	778
2½	2.469	4308	2961	2377	2035	1803	1634	1503	1399	1312	1239
3	3.068	7615	5234	4203	3567	3188	2889	2658	2472	2320	2191
*1 CFH of LP gas is approximately equal to 2.5 MBH; contact your gas supplier for the actual heating value of your gas.											

Table 33: Equivalent Lengths of Standard Pipe Fittings & Valves (ft)

Nominal Pipe Size	Inside Diameter (in)	Valves (Screwed) - Fully Open				Screwed Fittings				
		Gate	Globe	Angle	Swing Check	45° Elbow	90° Elbow	180 Close Return Bend	90 Tee Flow Through Run	90 Tee, Flow Through Branch
½	0.622	0.4	17.3	8.7	4.3	0.7	1.6	3.5	1.6	3.1
¾	0.824	0.5	22.9	11.4	5.7	1.0	2.1	4.6	2.1	4.1
1	1.049	0.6	29.1	14.6	7.3	1.2	2.6	5.8	2.6	5.2
1¼	1.38	0.8	38.3	19.1	9.6	1.6	3.5	7.7	3.5	6.9
1½	1.61	0.9	44.7	22.4	11.2	1.9	4.0	9.0	4.0	8.0
2	2.067	1.2	57.4	28.7	14.4	2.4	5.2	11.5	5.2	10.3
2½	2.469	1.4	68.5	34.3	17.1	2.9	6.2	13.7	6.2	12.3
3	3.068	1.8	85.2	42.6	21.3	3.6	7.7	17.1	7.7	15.3

Table 34: Specific Gravity Correction Factors

Specific Gravity	Correction Factor	Specific Gravity	Correction Factor
0.60	1.00	0.90	0.82
0.65	0.96	1.0	0.78
0.70	0.93	1.10	0.74
0.75	0.90	1.20	0.71
0.80	0.87	1.30	0.68
0.85	0.81	1.40	0.66

14. The gas pressure switches will trip if the incoming gas pressure passes the switches' set point. A tripped switch is indicated on the appliance display. A Manual reset is required to reset the switch and resume operation.

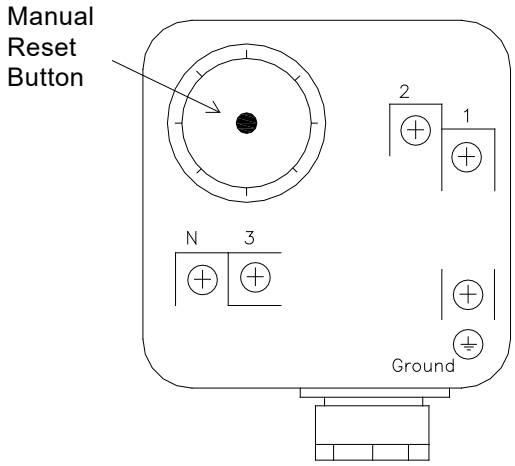

Figure 26: High/Low Gas Pressure Switch

⚠ WARNING

Failure to properly pipe gas supply to appliance may result in improper operation and damage. Always assure gas piping is absolutely leak free and of the proper size and type for the connected load.
An additional gas pressure regulator may be needed. Consult gas supplier.
Failure to use proper thread compounds on all gas connections may result in leaks of flammable gas.
Gas supply to appliance and system must be completely shut off prior to installing or servicing the gas piping.
Do not use matches, candles, or other open flame ignition source to check for leaks.
Use two wrenches when tightening gas piping at the appliance, use one wrench to prevent the gas train from turning.
Failure to support the connection pipe could damage safety components.
Ensure that the high gas pressure regulator is at least 10 feet (3 m) upstream of the appliance.

NOTICE

Use lock-up type gas pressure regulator when low and high gas pressure switches are installed. Older or non-lock-up type regulators may result in nuisance lockouts on gas pressure drops or spikes. All appliances must be firing at maximum capacity to properly measure the inlet gas pressure.

Table 35: Inlet Gas Pressures and Pipe Size

Model	Inlet Size (In.)	Min. Gas Pres. (In. W.C.)		Max. Gas Pres. (In. W.C.)		High Gas Pressure Switch[1] (In. W.C.)	Low Gas Pressure Switch[1] (In. W.C.)
		Natural	Propane	Natural	Propane		
1000	1	4	8	14	14	1	Natural: 3 LP: 7
1250	1						
1500	1.25						
2000	1.25						
2500	1.50						
3000	1.50						
3500	2.0						
4000	2.0						

[1] Factory default high and low gas pressure switch setpoint.

XIII. Electrical

A. General

Install wiring and electrically ground the appliance in accordance with authority having jurisdiction or, in the absence of such requirements, follow the *National Electrical Code*, NFPA 70, and/or *Canadian Electrical Code* Part 1, CSA C22.1.

1. A separate electrical circuit must be run from the main electrical service with an over-current device/disconnect in the circuit. A service switch is recommended and may be required by some local jurisdictions. Install the service switch in the line voltage "Hot" leg of the power supply. Locate the service switch such that the appliance can be shut-off without exposing personnel to danger in the event of an emergency.

B. Power Requirements

1. Nominal appliance current draw is provided in Table 36. These values are for planning purposes only and represent the appliance's maximum power consumption.

Table 36: Electrical Ratings

Model	Voltage	Phase	Hz	Appliance Amperage
1000 1250	120	1	60	11
	208			7.4
	240			6.5
1500 2000 2500	120	1	60	13.5
	208			8.2
	240			7.7
	208	3	60	11
	240			9.9
	480			6.4
3000	208	1	60	14.1
	240			12.6
	208	3		11
	240			9.9
	480			6.4
3500 4000	208	3	60	11
	240			9.9
	480			6.4

⚠ DANGER

Electrical Shock Hazard: Ensure all electrical connections are disconnected before attempting installation or service of electrical components or connections of the appliance or building. Lockout all electrical boxes with padlock once power is turned off.

⚠ WARNING

Electrical Shock Hazard: Failure to properly wire electrical connections on the appliance may result in serious physical harm.
Electrical power may be from more than one source. Make sure all power is off before attempting any electrical work.
Each appliance must be protected with a properly sized over-current device.
Never jump out or make inoperative any safety or operating controls.
The wiring diagrams contained in this manual are for reference purposes only. Each appliance is shipped with a wiring diagram attached to the front door. Refer to this diagram and the wiring diagram of any controls used. Read, understand and follow all wiring instructions supplied with the control.

NOTICE

All wires, wire nuts, controls etc. are installer supplied unless otherwise noted.
When making low voltage connections, make sure that no external power source is present in the thermostat or limit circuits. If such a power source is present, it could destroy the microprocessor control. One example of an external power source that could be inadvertently connected to the low voltage connections is a transformer with old thermostat wiring.
To obtain total system power consumption add all selected circulator and component current draws
Label all wires prior to servicing controls. Wiring errors can cause improper and dangerous operation. Verify Proper operation after servicing.

C. Appliance Wiring

1. Connect to field wiring inside the control box. Inside the control box are five printed circuit boards (PCB's).

Table 37: PCB's

Printed Circuit Boards	Functions/Connection
PCB-01	Line Voltage
PCB-02	Field Device
PCB-03	Extra Limits (optional)
PCB-04	Sensors
PCB-05	EMS
PCB-06	Communications

2. 24VAC low voltage connections are located on PCB-02. Three fuses and one spare are provided.
3. 24VDC low voltage connections are located on the right side of PCB-01. One low voltage fuse and one spare is provided.

4. Line voltage connections

a. Connect 120 VAC power wiring to the line voltage terminal strip in the control box.

b. For 208 - 480 VAC, connect power wires to the line voltage terminals in the junction box.

c. Provide and install a fused disconnect or service switch as required by the code.

5. Low voltage connections

a. Route all low voltage wires through the junction box's knockouts in the rear of the appliance.

b. If applicable, wire the tank sensor, header sensor, or outdoor temperature sensor to PCB-4 terminals 51 and 52 as noted on the wiring ladder diagram. See "Wire Diagram (continued)". For indirect water heating use the DHW switch location (terminals 53 and 54).

i. The outdoor sensor should be located on the outside of the structure in an area where it will sense the average air temperature around the building. Avoid placing this sensor in areas where it may be covered with ice or snow. Locations where the senor will pick up direct radiation from the sun should also be avoided.

c. Avoid placing senors near potential sources of electrical noise such as transformers, power lines, and fluorescent lighting. Wire the sensor to the appliance using 22 gauge or larger wire. As with the sensor, the sensor wiring should be routed away from sources of electrical noise. Where it is impossible to avoid such noise sources, wire the sensor using a 2 conductor, *UL Type CM, AWM Style 2092, 300 Volt 60 C* shielded.

6. System and Circulation Pump Wiring

a. The system pump can be wired to Contact A on PCB-02 as shown on the wire diagram.

b. The primary circulation pump can be wired to Contact B on PCB-02 as shown on the wire diagram.

c. For an isolation valve or indirect DHW pump, use contact C.

⚠ WARNING

Appliance must be electrically grounded as required by National Electrical Code ANSI/NFPA 70-latest edition.

Caution: Label all wires prior to disconnection when servicing controls. Wiring errors can cause improper and dangerous operation.

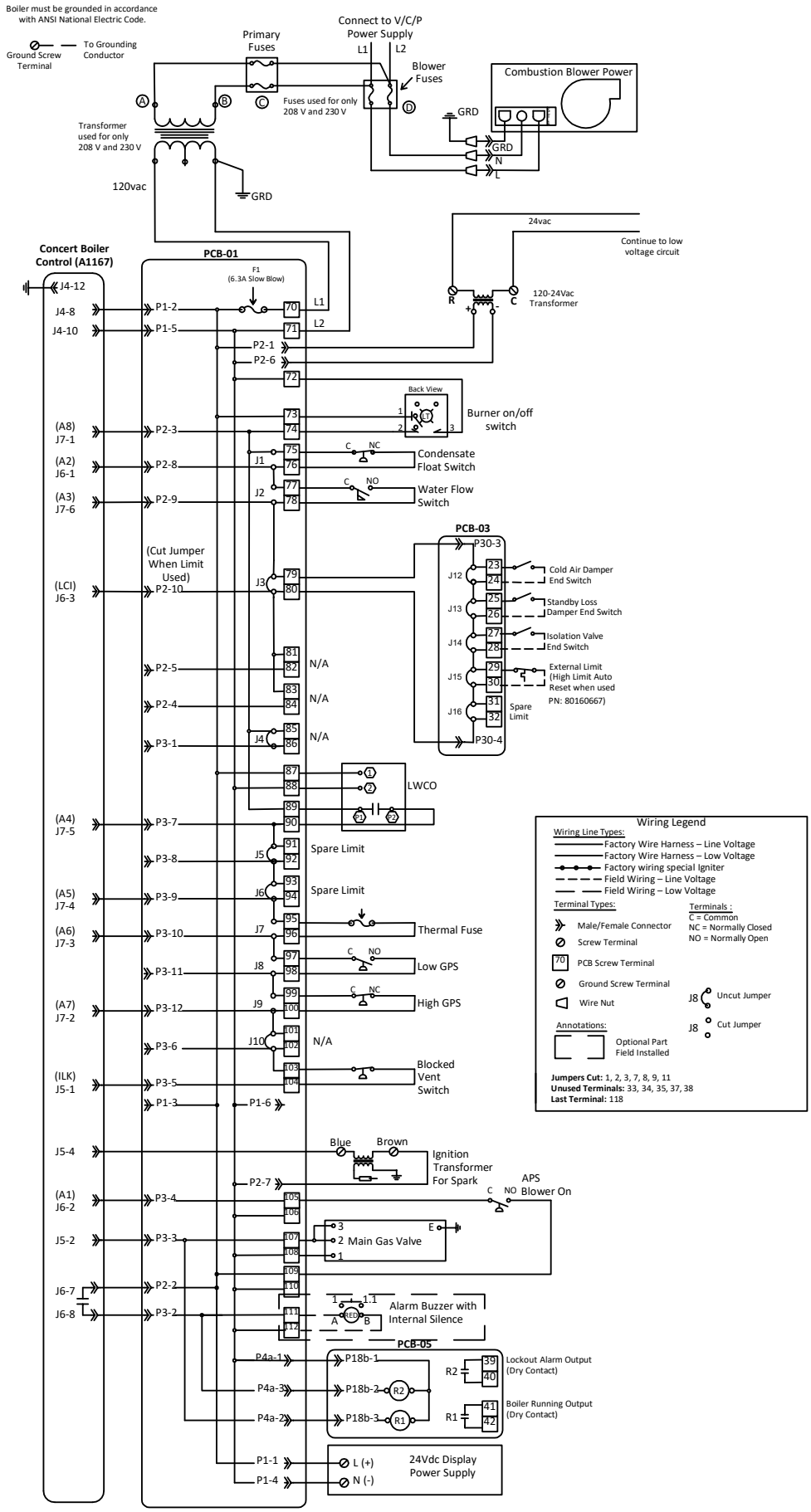

Figure 27: Single Phase Wire Diagram

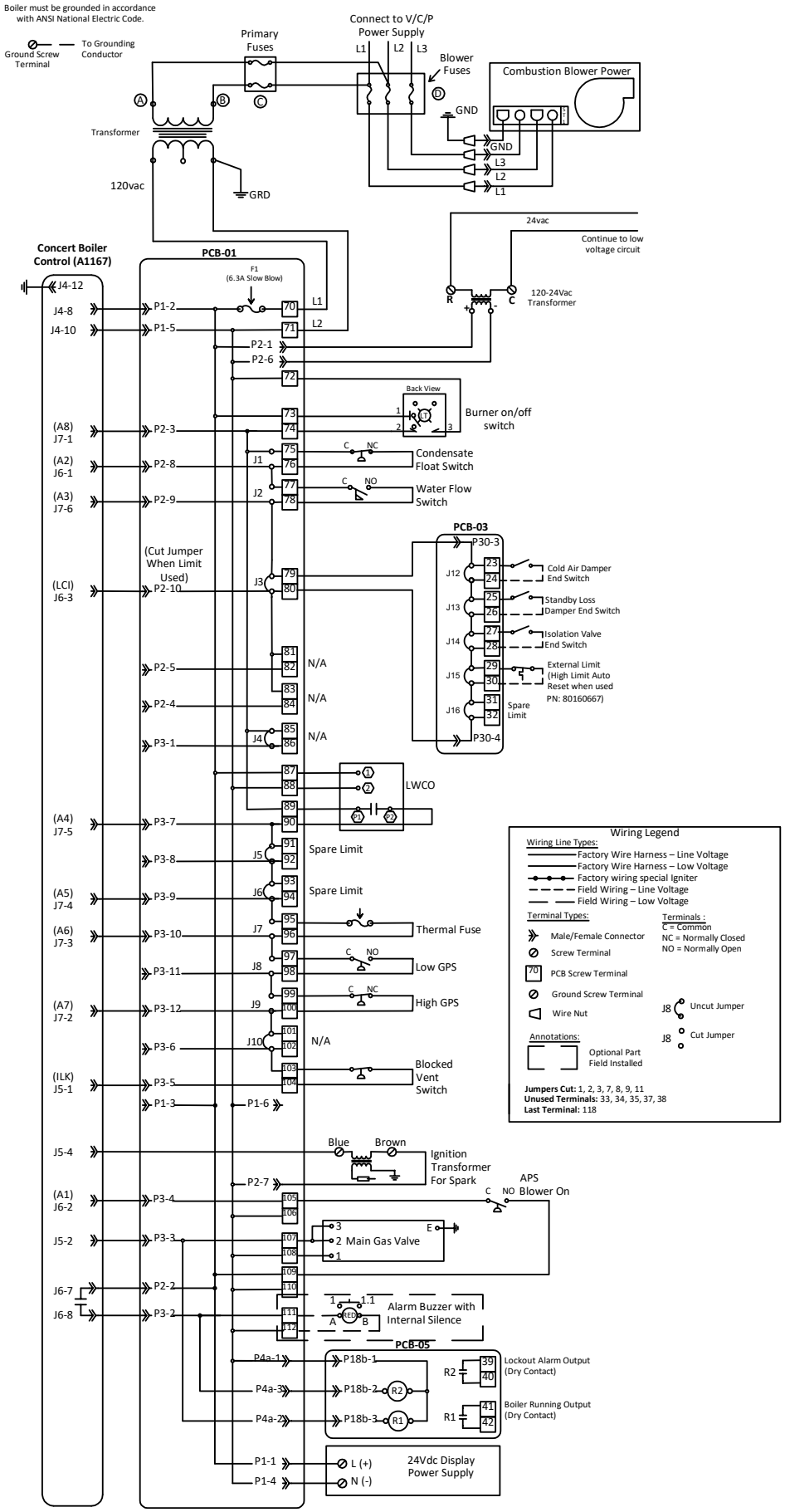

Figure 28: Three Phase Wire Diagram

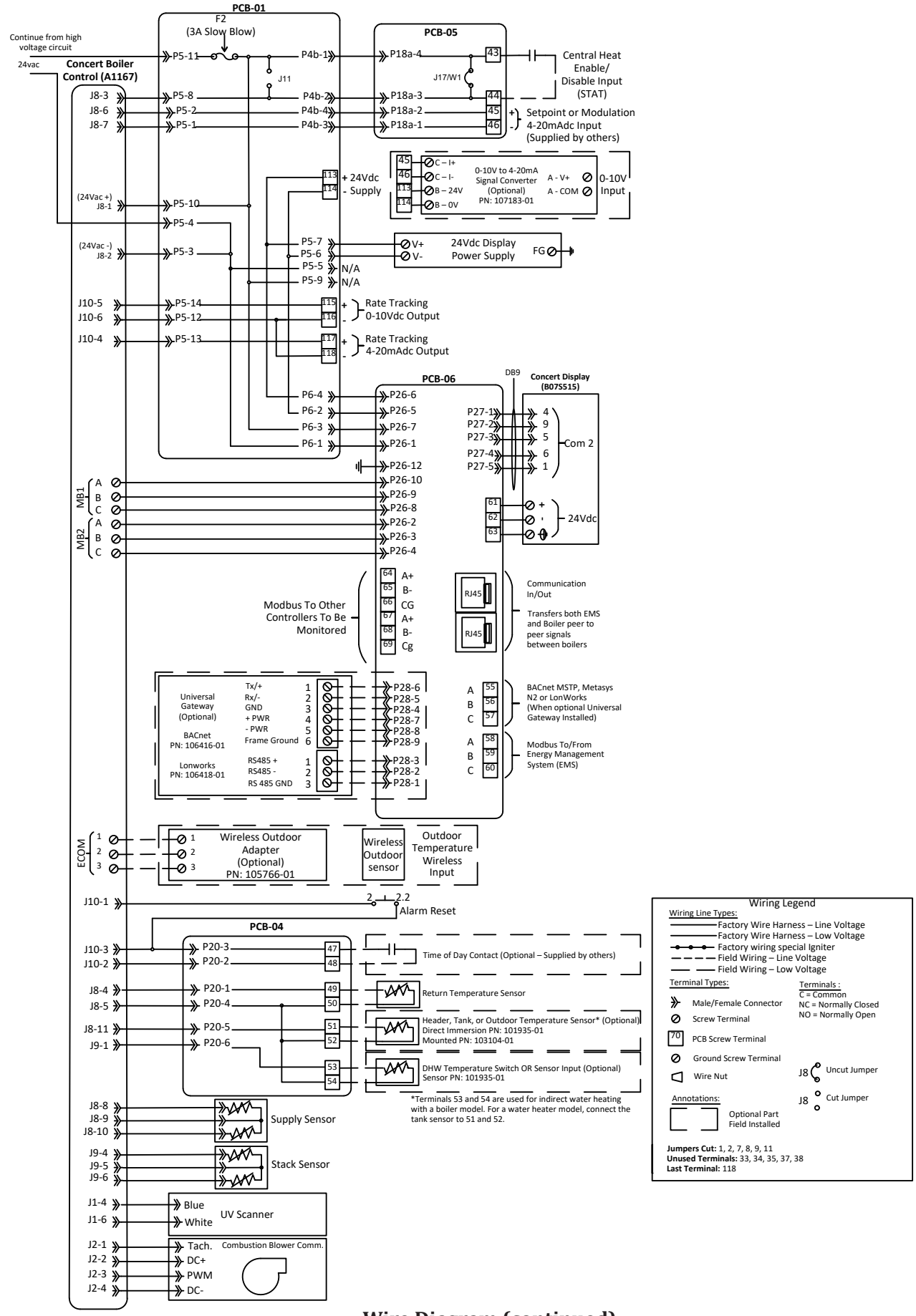

Wire Diagram (continued)

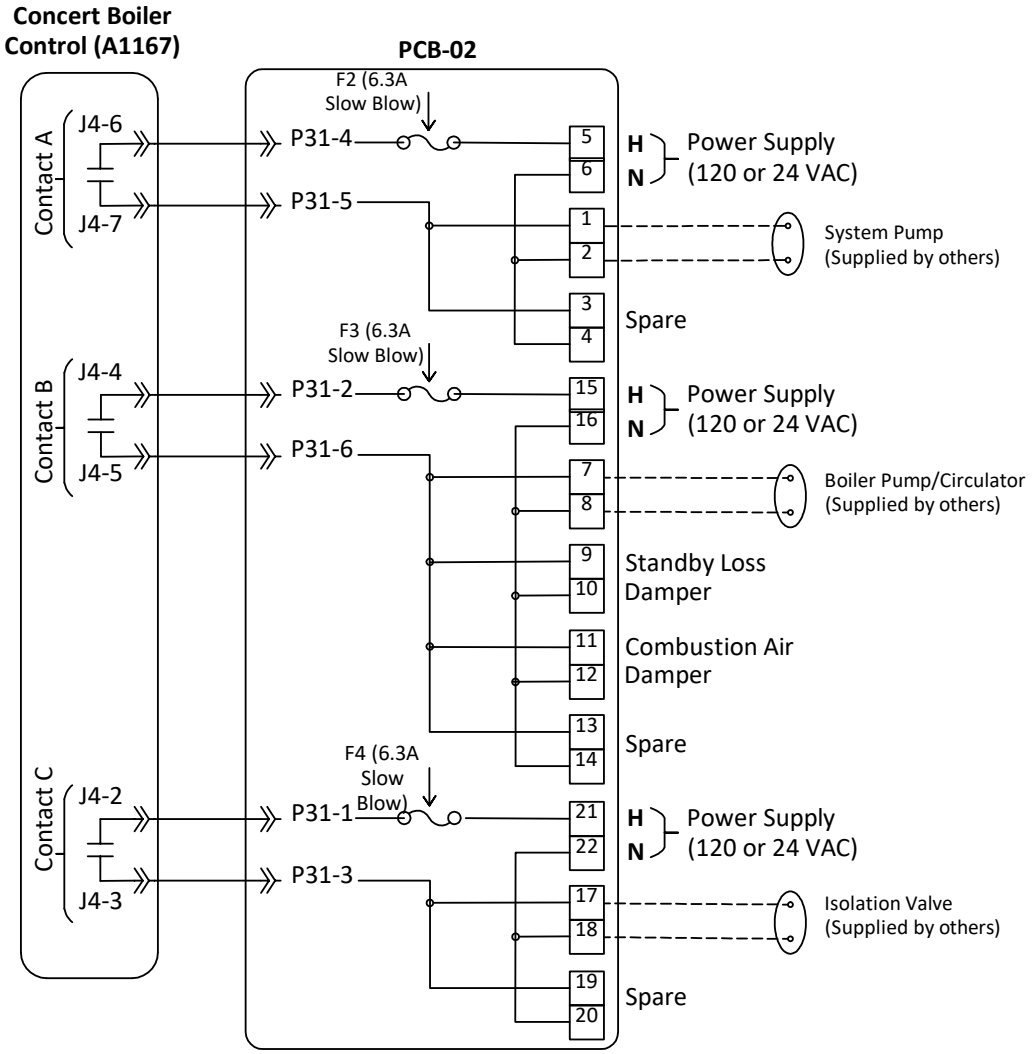

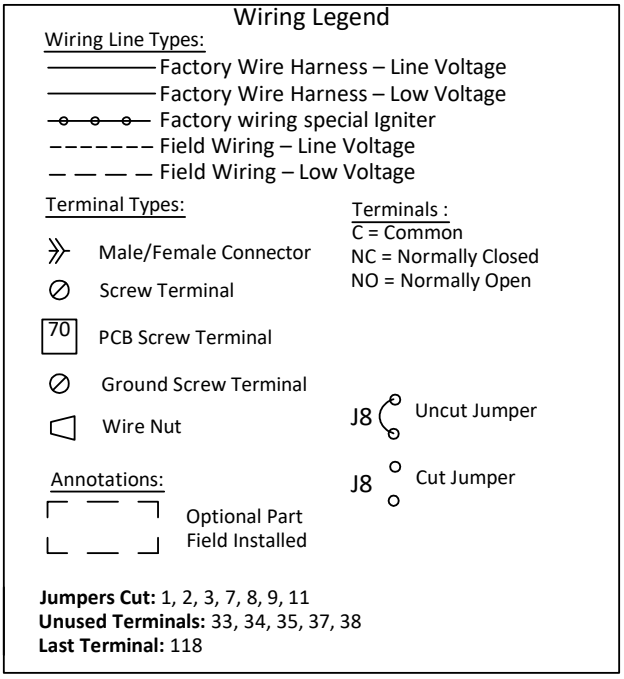

Wire Diagram (continued)

XIV. System Start-up

A. Check System Setup

1. Verify that the venting, water piping, gas piping and electrical system are installed properly. Refer to installation instructions contained in this manual.
2. Confirm all electrical, water, and gas supplies are turned off at the source and that venting is clear of obstructions.
3. Flush the system to remove sediment, flux, and other contaminants. This must be done with the appliance isolated from the system.
4. Fill the hot water system with treated water as specified in the water quality section of this manual.
   a. Maintain at least 15 psi primary loop pressure.
5. Power the appliance. Turn on the electrical supply to the appliance and circulator at the fuse disconnect switch.
6. Power the circulator(s). Turn system circulator(s) on and purge air from the system.
7. Pressurize the fuel line.
   a. Open the manual gas shut-off valves located upstream of the field supplied gas regulator.
   b. Check gas piping for leaks and purge gas line of air.
   c. Ensure the incoming gas pressure is within the min and max on the rating label. Also, ensure the setting for the high and low gas pressure switches are within the limits given in Table 35.
   d. Reset high and low gas pressure switches by pressing the reset button.

⚠ DANGER

Do not use matches, candles, or other open flame ignition sources to check for leaks.
Make sure that the area around the appliance is clear and free from combustible materials, gasoline and other flammable vapors and liquids.

⚠ WARNING

Start-up of this appliance should be undertaken only by trained and skilled personnel from a qualified service agency. Follow these instructions exactly. Improper installation, adjustment, service or maintenance can cause severe personal injury, death, or substantial property damage.

The maximum operating pressure of this appliance is 150psi (1034 kPa) with the factory installed temperature and pressure relief valve. Never exceed the maximum allowable working pressure on the heat exchanger ASME plate.

B. Start the Boiler

Start the appliance using "Operating Instructions"in Figure 29.

1. Allow the appliance to complete its standard startup sequence: pre-purge, Drive to Lightoff, pre-ignition, and direct ignition.
2. Refer to the Concert Boiler Control manual to select the desired control mode.
3. It may take a couple of ignition attempts before a flame is established. After the first ignition failure, the appliance goes into a hard lockout and a manual reset using the Concert Control is required to restart. If ignition is not achieved in three consecutive attempts, contact factory or a qualified heating service technician.
4. Begin commissioning the appliance. Visually inspect flame via sight glass window. On high fire the flame should be stable and mostly blue. Yellow tips should not be present; but, intermittent flecks of yellow and orange in the flame are normal.
5. Test any other external limits or other controls in accordance with the manufacturer's instructions.

⚠ WARNING

Asphyxiation Hazard. Each appliance is tested at the factory and adjustments to the air fuel mixture are normally not necessary. Improper gas valve or mixture adjustments could result in property damage, personal injury or death.

Any gas valve adjustments (throttle and/or offset) specified herein and subsequent combustion data (%O2, %CO2, CO air free ppm) collection must be performed using a calibrated combustion analyzer. Failure to use combustion analyzer could result in personal injury, death, or substantial property damage.

FOR YOUR SAFETY READ BEFORE OPERATING/POUR VOTRE SECÚRITE LÍSEZ AVÁNT DE METTRE EN MARCHE

WARNING: If you do not follow these instructions exactly, a fire or explosion may result causing property damage, personal injury or loss of life.

AVERTISSEMENT: Quiconque ne respecte pas à la lettre les instructions dans la présente notice risque de déclencher un incendie ou une explosion entraînant des dommages, des blessures ou la mort.

A. This appliance does not have a pilot. It is equipped with an ignition device which automatically lights the burner. Do not try to light the burner by hand.

B. BEFORE OPERATING smell all around the appliance area for gas. Be sure to smell next to the floor because some gas is heavier than air and will settle on the floor.

WHAT TO DO IF YOU SMELL GAS:

- Do not try to light any appliance.
- Do not touch any electric switch; do not use any phone in your building.
- Immediately call your gas supplier from a neighbor's phone. Follow the gas supplier's instructions.
- If you cannot reach your gas supplier, call the fire department.

C. Use only your hand to turn the gas control knob. Never use tools. If the knob will not turn by hand, don't try to repair it, call a qualified service technician. Force or attempted repair may result in a fire or explosion.

D. Do not use this appliance if any part has been under water. Immediately call a qualified service technician to inspect the appliance and to replace any part of the control system and any gas control which has been under water.

A. Cet appareil ne comporte pas de veilleuse. Il est muni d'un dispositif d'allumage qui allume automatiquement le brûleur. Ne tentez pas d'allumer le brûleur manuellement.

B. AVANT DE FAIRE FONCTIONNER, reniflez tout autour de l'appareil pour déceler une odeur de gaz. Reniflez près du plancher, car certains gaz sont plus lourds que l'air et peuvent s'accumuler au niveau du sol.

QUE FAIRE SI VOUS SENTEZ UNE ODEUR DE GAZ:

- **Ne pas tenter d'allumer d'appareil.**
- **Ne touchez à aucun interrupteur ; ne pas vous servir des téléphones se trouvant dans le bâtiment.**
- **Appelez immédiatement votre fournisseur de gaz depuis un voisin. Suivez les instructions du fournisseur.**
- **Si vous ne pouvez rejoindre le fournisseur, appelez le service des incendies.**

C. Ne poussez ou tournez la manette d'admission du gaz qu'à la main ; ne jamais utiliser d'outil. Si la manette reste coincée, ne pas tenter de la réparer ; appelez un technicien qualifié. Le fait de forcer la manette ou de la réparer peut déclencher une explosion ou un incendie.

D. N'utilisez pas cet appareil s'il a été plongé dans l'eau, même partiellement. Faites inspecter l'appareil par un technicien qualifié et remplacez toute partie du système de contrôle et toute commande qui ont été plongés dans l'eau.

OPERATING INSTRUCTIONS/ INSTRUCTIONS DE FONCTIONNEMENT

1. STOP! Read safety information above on this label.
2. Set the thermostat to lowest setting.
3. Turn off all electric power to the appliance.
4. This appliance is equipped with an ignition device which automatically lights the burner. Do not try to light the burner by hand.
5. Turn the external boiler manual gas valve handle clockwise to close the gas supply.
6. Wait five (5) minutes to clear out any gas. Then smell for gas, including near the floor. If you smell gas, STOP! Follow "B" in the safety information above on this label. If you don't smell gas, go to the next step.
7. Turn the external boiler manual gas valve handle counterclockwise to open the gas supply.
8. Turn on all electric power to the appliance.
9. Set the thermostat to the desired setting.
10. If the appliance will not operate, follow the instructions "To Turn Off Gas To Appliance" and call your service technician or gas supplier.

1. ARRÊTEZ ! Lisez les instructions de sécurité sur la portion supérieure cette étiquette.
2. Réglez le thermostat à la température la plus basse.
3. Coupez l'alimentation électrique de l'appareil.
4. Cet appareil est équipé de l' dispositif d'allumage qui automobile allume maticallyle brûleur. Ne tentez pas d'allumer le brûleur manuellement.
5. Tourner la chaudière externe manuelle poignée en clapet à gaz dans le sens des aiguilles d'une montre pour fermer l'offre de gaz.
6. Attendre cinq (5) minutes pour laisser échapper tout le gaz. Reniflez tout autour de l'appareil, y compris près du plancher, pour déceler une odeur de gaz. Si vous seutez une odeur de gaz, ARRÊTEZ ! Passez à l'étape B des instructions de sécurité sur la portion supérieure de cette étiquette. S'il n'y a pas d'odeur de gaz, passez à l'étape suivante.
7. Tourner la chaudière externe manuelle compteur de poignée en clapet à gaz ouvrir dans le sens des aiguilles d'une montre le gaz approvisionnement.
8. Mettez l'appareil sous tension.
9. Réglez le thermostat à la température désirée.
10. Si l'appareil ne se met pas en marche, suivez les instructions intitulées « Comment couper l'admission de gaz de l'appareil » et appelez un technicien qualifié ou le fournisseur de gaz.

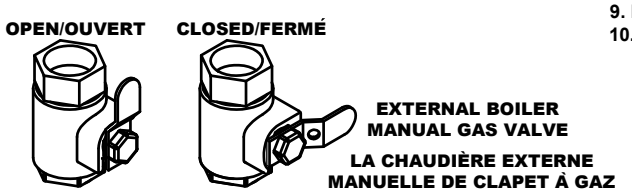

TO TURN OFF GAS TO APPLIANCE/ COMMENT COUPER L'ADMISSION DE GAZ DE L'APPAREIL

1. Set the thermostat to lowest setting.
2. Turn off all electric power to the appliance if service is to be performed.
3. Turn the external boiler manual gas valve handle clockwise to close gas supply.

1. Réglez le thermostat à la température la plus basse.
2. Coupez l'alimentation électrique de l'appareil s'il faut procéder à l'entretien.
3. Tourner la chaudière externe manuelle poignée en clapet à gaz dans le sens des aiguilles d'une montre pour fermer l'offre de gaz.

101607-03

Figure 29: Operating Instructions

6. Verify O_2 (or CO_2) and CO concentration are within limits specified in Table 38. Note: the values in this table are for sea level only. For high altitude installation, above 2000 ft. consult factory.

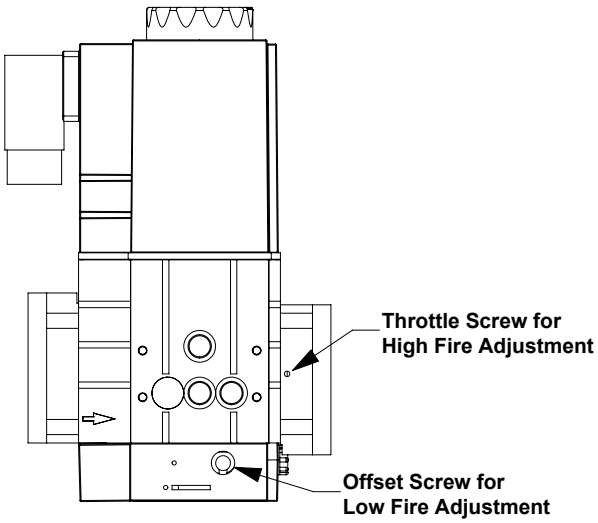

Figure 30: Gas Valve Air/Fuel Adjustment

Table 38: Combustion O_2/CO_2 Levels

	Natural Gas		LP Gas	
Model	**CO_2 %**	**O_2 %**	**CO_2 %**	**O_2 %**
1000	8.4-9.5	4.0-6.0	9.8-11.1	4.0-6.0
1250	8.4-9.5	4.0-6.0	9.8-11.1	4.0-6.0
1500	8.4-9.5	4.0-6.0	9.8-11.1	4.0-6.0
2000	8.4-9.5	4.0-6.0	9.8-11.1	4.0-6.0
2500	8.4-9.5	4.0-6.0	9.8-11.1	4.0-6.0
3000	8.4-9.5	4.0-6.0	9.8-11.1	4.0-6.0
3500	8.4-9.5	4.0-6.0	9.8-11.1	4.0-6.0
4000	8.4-9.5	4.0-6.0	9.8-11.1	4.0-6.0

C. Combustion Air/Fuel Adjustment

1. For high fire adjustment
   a. Lock the appliance in high fire and allow fan speed and combustion analyzer reading to stabilize before taking combustion readings. To lock in high fire, select MAIN MENU >> OPERATION. Select lock symbol, type password and select ENTER. From the Operation screen, select Automatic / Manual Firing Rate Control >>Manual Modulation. Go back to Operation screen. Then select High Low >> High.
   b. Once high fire rate is reached, adjust the O_2 level at high fire with all the jackets, including the front cabinet door, closed.
   c. For appliances specified to be less than 20 ppm NOx adjust O_2 level to approximately 6.0% (Natural gas).
   d. If high fire O_2 is too high (CO_2 is too low), decrease O_2 (increase CO_2) by turning the throttle screw towards the "Plus (+)" sign in 1/4 turn increments and checking the O_2 (or CO_2) after each adjustment. Refer to Figure 30 for location of throttle screw. Verify CO air free is less than 200 ppm.
2. For low fire adjustment
   a. Lock appliance in low fire and allow fan speed and combustion analyzer reading to stabilize before taking combustion readings. To lock in low fire, select High Low >> Low.
   b. If low fire O_2 is too low (CO_2 is too high), increase O_2 (decrease CO_2) by turning the offset screw towards the "Minus (-)" sign in less than 1/8 turn increments and checking the O_2 (or CO_2) after each adjustment. Verify CO concentration is less than 200 ppm.
   c. If low fire O_2 is too high (CO_2 is too low), decrease O_2 (increase CO_2) by turning the offset screw towards the "Plus (+)" sign in 1/4 turn increments and check O_2 (or CO_2) after each adjustment. Verify CO air free is less than 200 ppm.
   d. Verify O_2 repeatability by modulating to high and low fire three times.
   e. Once the appliance is operating within the specified high and low fire ranges, record emissions, flue draft, and other important data.
   f. Compare emission data to the factory emissions report posted on the back of the front jacket panel.
3. Return the appliance to Automatic Mode. From Operation screen, select Automatic / Manual Firing Rate Control >> Automatic Modulation. Select HOME to return to the Home Screen.

⚠ CAUTION

Do not operate this appliance without air filter installed and front panel secured with latches and screws as provided. Failure to comply could result in unreliable operation, minor personal injury, or property damage.

D. Field Conversion of Gas Type

This appliance is factory tested and set up for the gas type selected but can be field converted with the following steps.

⚠ WARNING

Changing gas type requires adjustment to the gas valve. Not following these instructions may result in personal injury, death, or substantial property damage.

1. Connect the new gas supply to the appliance, check for leaks, and purge the gas line in accordance with the *National Fuel Gas Code*, ANSI Z223.1/NFPA 54 and/or *Natural Gas and Propane Installation Code*, CAN/CSA B149.1 or the requirements of the authority having jurisdiction.
2. Adjust the throttle screw towards negative (-) all the way to the closed position. Then, open the throttle with the number of turns for the gas type and model as given in Table 39.
3. Start the appliance using the System Start-up section of these instructions. Even if the gas line has been completely purged of air, the burner may fail to ignite. If burner does not light, turn the throttle towards positive (+) in 1/4 turn increments, allowing at least three tries for ignition at each setting, until ignition is achieved.
4. Use a combustion analyzer and follow the Air/Fuel adjustment instructions to set up high fire and low fire.
5. Fill out the gas conversion labels included with the appliance (Order part number 110301-01 if not included). Follow the instructions included with the label for placement.

⚠ WARNING

Asphyxiation Hazard. These instructions include a procedure for adjusting the air-fuel mixture on this boiler. This procedure requires a combustion analyzer to measure the O2 (or CO2) and Carbon Monoxide (CO air free) levels in flue gas. Adjusting the air-fuel mixture without a proper combustion analyzer could result in unreliable boiler operation, personal injury, or death due to carbon monoxide poisoning.

⚠ WARNING

Improper Gas valve adjustment may cause air deficiency. Operating in this condition causes dangerous levels of CO and potentially flashback.

Make sure that all adjustments at high fire are made with the throttle, not offset screw.

The throttle adjustment values shown are approximate. The final throttle setting must be found using a combustion analyzer.

Table 39: Approximate Throttle Screw Position for Gas Types

Model	Number of turns from closed	
	Natural Gas	LP Gas
1000	2	1
1250	2	1
1500	3	2.5
2000	3	2.5
2500	3	2.5
3000	4	3
3500	4	3
4000	4	3

E. Pump Control

Ensure the appropriate pump parameters are selected in the Pumps menu of the Concert control. Refer to the Concert Boiler Control manual for more information.

F. Check Thermostat Operation

Verify that the appliance starts and stops in response to calls for hot water. Make sure that the appropriate circulator(s) start and stop.

G. Adjust Supply Water Temperature

As shipped, the central heat and DHW setpoint is 180°F (82.2°C). If necessary, adjust this to the appropriate settings for the system to which this appliance is connected. For information on how to adjust the set point, refer to the "Setup and Tuning" section of the Concert™ Boiler Control manual.

1. For a hot water supply boiler supplying domestic hot water, at the factory setting, a mixing valve is required to control the supply water at a temperature that will not cause scalding.

H. Testing of Controls and Safety Devices

Prior to placing the appliance in operation, the installing contractor or other responsible personnel must perform safety and control device limit tests to ensure proper operation of the appliance. Refer to Table 40 for recommended method(s) of carrying out these safety limit devices tests.

Table 40: Safety Device Test

Component	Test Method(s)	After Lockout Annunciation	Actual Alarm Message
High Gas Pressure Switch	Close the manual gas valve between the gas valve and the blower. Cycle the power.	Manually reset the Concert Boiler Control and switch. Adjust the switch to its normal setting.	Hard Lockout. Gas Pressure Switch
Low Gas Pressure Switch	Increase the setting of the switch until the switch trips.	Manually reset the Concert Boiler Control and switch. Adjust the switch to its normal setting.	Hard Lockout. Gas Pressure Switch
Vestibule Thermal Fuse	Disconnect one wire of the thermal fuse. Cycle the power.	Re-connect wiring to the thermal fuse. Reset thermal fuse lockout.	Hard Lockout. Thermal Fuse
Blocked Condensate Switch	Disconnect one wire of the blocked condensate switch. Cycle the power.	Re-connect wire to the blocked condensate switch. Reset the blocked condensate switch lockout.	Hard Lockout. Blocked Condensate switch
Low Water Cutoff	While the appliance is running push and hold the LWCO test button until the control shuts down the main burner.	Manually reset the Concert Boiler Control and reset the LWCO by pressing the reset button.	Hard Lockout. Low Water Level.
Water Flow Switch	Reduce the water flow rate with a manual shutoff valve until the appliance shuts down.	Adjust manual valve to normal position.	Low Water Flow

IMPORTANT PRODUCT SAFETY INFORMATION
REFRACTORY CERAMIC FIBER PRODUCT

⚠ WARNING

The Repair Parts list designates parts that contain refractory ceramic fibers (RCF). RCF has been classified as a possible human carcinogen. When exposed to temperature above 1805 °F, such as during direct flame contact, RCF changes into crystaline silica, a know carcinogen. When disturbed as a result of servicing or repair, these substances became airborne and, if inhaled, may be hazardous to your health.

AVOID Breathing Fiber Particulates and Dust

Precautionary Measures:

Do not remove or replace RCF parts or attempt any service or repair work involving RCF without wearing the following protective gears:

1. A National Institute for Occupational Safety and Health (NIOSH) approved respirator
2. Long sleeved, loose fitting clothing
3. Gloves
4. Eye Protection

- Take steps to assure adequate ventilation
- Wash all exposed body area gently with soap and water after contact.
- Wash work clothes separately from other laundry and rinse washing machine after use to avoid contaminating other clothing.
- Discard used RCF components by sealing in an airtight plastic bag. RCF and crystalline silica are not classified as hazardous wastes in the United State and Canada.

First Aid Procedures:

- If contact with eyes: Flush with water for at least 15 minutes. Seek immediate medical attention if irritation persists.
- If contact with skin: Wash affected area gently with soap and water. Seek immediate medical attention if irritation persists.
- If breathing difficulty develops: Leave the area and move to a location with clean fresh air. Seek immediate medical attention if breathing difficulties persist.
- Ingestion: Do NOT induce vomiting. Drink plenty of water. Seek immediate medical attention.

XV. Service and Maintenance

A. General Maintenance

1. Keep the area around the appliance free from combustible materials. (Gasoline and other flammable vapors and liquids)
2. Keep the area around the combustion air inlet terminal free from contaminants.
3. Keep the boiler room ventilation orifices open and unobstructed.
4. Remove front jacket panel and check minimum and blocked vent switches for cracks and check pressure sensing line connections.
5. Vacuum any sediment and dust from the interior and components.

B. Monthly Inspection

1. Inspect the vent piping and outside air intake piping to verify they are open, unobstructed, and free of leakage or deterioration. Check screens in vent and air intake terminations to verify they are clean and free of debris.
2. Inspect the condensate drain system to verify it is leak proof, open and unobstructed. Call the service technician if the condensate drain system requires maintenance.
3. Inspect water and gas lines to verify they are free of leaks.

C. Annual Inspections and Service

In addition to the inspection listed above the following should be performed by a service technician once every year.

1. Check O2% or CO2% and CO using a combustion analyzer and ensure readings are within the ranges in the start-up section of this manual. Adjust if necessary.
2. Water flow switch
   a. Test the flow switch by disabling the appliance's primary loop circulator. The appliance must not start when there is no flow of water.
   b. Remove flow switch and visually inspect paddle length. The markings on the flow switch should correspond to the model size to witch it is installed.

⚠ WARNING

Read and understand the entire manual before attempting installation, start-up, operation, or service. Installation and service must be performed only by an experienced and skilled installer or service agency.

This appliance requires regular maintenance and service to operate safely. Follow the instructions contained in this manual. Improper installation, adjustment, alteration, service, or maintenance can cause personal injury, death, or substantial property damage.

A clean and unobstructed venting system is necessary to allow noxious fumes that could cause injury or loss of life to vent safely, and will contribute toward maintaining the appliance's efficiency.

Installation is not complete unless a safety relief valve is installed in the tapping located on the water manifold or supply piping. Refer to piping section of the manual.

If damage due to frozen pipes is a possibility, the piping system should be not left unattended in cold weather; or appropriate safeguards and alarms should be installed on the heating system to prevent damage if the appliance is inoperative.

Do not unscrew any pipe fittings nor attempt to disconnect any components on this appliance without positively assuring the water is cool and has no pressure. Always wear protective clothing and equipment when installing, starting up, or servicing this appliance to prevent scald injuries.

⚠ CAUTION

Caution: Label all wires prior to disconnection when servicing controls. Wiring errors can cause improper and dangerous operation.

Verify proper operation after servicing.

NOTICE

To reduce lime scale buildup and prolong the life of the appliance, closely monitor pH, chloride, total dissolved solids, and water hardness levels.

3. Igniter Electrode
   a. Disconnect power to the unit and remove ignition electrode from the burner door.
   b. Visually inspect igniter assembly (ceramic insulators, bracket, and graphite gasket) for damage. Replace igniter assembly if the electrodes are deformed or ceramic insulators are cracked.

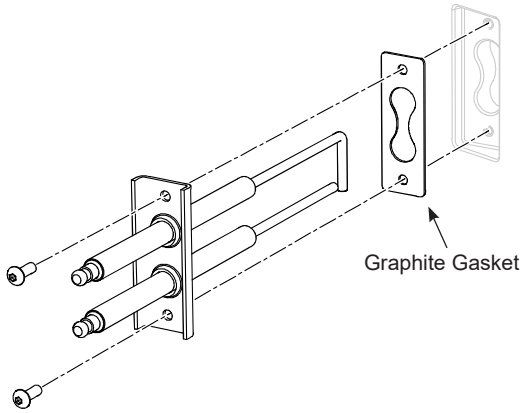

Figure 31: Igniter Electrode Assembly

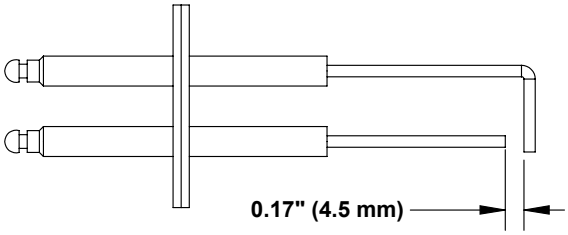

Figure 32: Igniter Electrode Gap

   c. Remove any excess oxide deposits from the surface of the igniter with steel wool or emery cloth. Do not use sandpaper.
   d. Ensure there is a 0.17" (4.5 mm) gap between the tips of the electrode.
   e. Install igniter electrode in the orientation shown in Figure 31; otherwise, the unit will not light.
   f. After reinstalling the igniter, make sure there is a ⅜ inch gap between the igniter and the burner surface.

⚠ DANGER

This appliance uses flammable gas, high voltage electricity, moving parts, and very hot water under high pressure. Ensure that all gas and electric power supplies are off and that the water temperature is cool before attempting any disassembly or service.

Do not attempt any service work if gas is present in the air around the appliance. Never modify, remove or tamper with any control device.

⚠ WARNING

This appliance contains components that become very hot when the operating. Do not touch any components unless they are cool.

This appliance contains materials of construction, products of combustion and the fuel contain alumina, silica, heavy metals, carbon monoxide, nitrogen oxides, aldehyde and/or other toxic or harmful substances which can cause death or serious injury and which are known to the state of California to cause cancer, birth defects and other reproductive harm. Always use proper safety clothing, respirators, and other safety equipment when servicing or working near the appliance.

Failure to follow all instructions in the proper order can cause personal injury or death. Read all instructions, including all those contained in component manufacturers manuals which are provided with the appliance before installing, starting up, operating, maintaining, or servicing.

All cover plates, enclosures and guards must be in place at all times.

If any controls are replaced, they must be replaced with identical models.

If any electrical wires are disconnected during service, clearly label the wires and assure that the wires are reconnected properly.

Never jump out or bypass any safety or operating control or component.

Interior of the venting system must be inspected and clean before the initial startup and should be inspected periodically for any obstructions.

4. UV Scanner/ Flame Sensor
   a. Inspect ultra-violet (uv) scanner lens and remove any debris with a soft cloth. If condensate or fog is observed on the glass, the gaskets may need to be replaced.

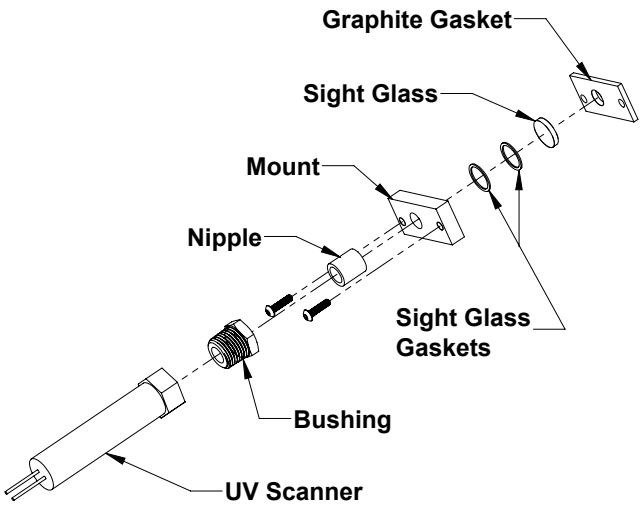

Figure 33: UV Scanner Assembly

5. Burner and Combustion Chamber
   a. To gain access to burner and combustion chamber, first remove front jacket panel and then disconnect gas inlet pipe from the gas valve at the union connection.
   b. Remove the front left side jacket panel.
   c. Remove all eight bolts (M14 X 40mm) holding the burner door to the heat exchanger using a 12mm hex bit socket.
   d. This unit is equipped with a sliding mechanism shown in Figure 34. Position (1) burner assembly slides out of the combustion chamber, (2) rotate away from the combustion chamber and (3) sliding back to allow full access to the combustion chamber for inspection and service.
   e. Gently blow compressed air over the burner surface and door insulation to remove lint and debris. Replace burner if the surface shows any signs of damage due to improper handling or gas valve combustion settings.
      i. Minor blue, yellow, and brown coloring is normal for burners recently installed.
      ii. Some white and/or red residue is normal.
      iii. Burners with any cracks or dents must be replaced immediately. Inspect weld seams and end cap thoroughly.

⚠ WARNING

Failure to properly secure the burner/blower/gas valve assembly to the heat exchanger could lead to personal injury, death, or substantial property damage.

Read, understand and follow all the instructions and warnings contained in ALL of the component instruction manuals.

Assure that all limits and operating controls and components are operating properly before placing the appliance back in service.

Annually inspect all vent gaskets and replace any exhibiting damage or deterioration.

NOTICE

This appliance has a limited warranty, a copy of which is included in shipping. It is the Responsibility of the installing contractor to see that all controls are correctly installed and are operating properly when the installation is complete.

Warranty does not cover damage or malfunction if the steps mentioned in this manual are not performed at the intervals specified.

Water leaks can cause severe corrosion damage immediately repair any leaks found.

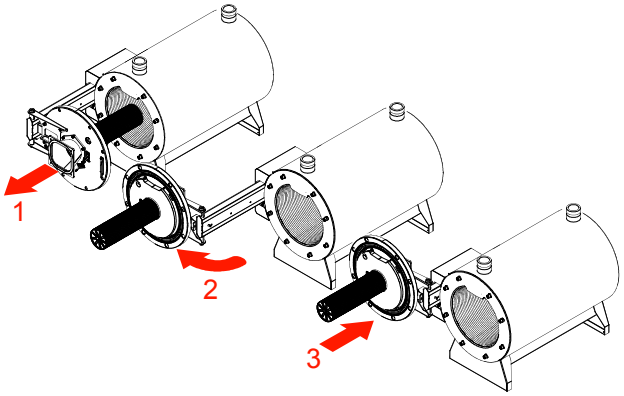

Figure 34: Burner Door Opening

   f. Do not use acid or alkali products or metallic brush to clean the heat exchanger coils. Follow these guidelines to clean the heat exchanger:
      i. Spray the heat exchanger coils with white vinegar (acetic acid) and then flush it with clean water after 20 minutes.

ii. Do not spray burner, combustion chamber divider, or burner door insulations .

6. Flue outlet connection
   a. Visually inspect flue outlet gasket for damage or deterioration, replace if necessary.
   b. Any accumulation of soot or debris should be thoroughly cleaned out.
7. Combustion air filter with air box
   a. Undo the latches on the filter box to lift the lid and access the filter.
   b. Clean the filter of dust and debris using compress air or water.
   c. Replace filter if it appears damaged or deteriorated.
   d. Reinstall filter and lid.
8. Combustion air filter without air box
   a. Remove air intake pipe to gain access to the filter. Blow compressed air though the filter to remove dust and debris.
   b. Replace filter if it appears damaged or deteriorated.
   c. Reinstall air filter and intake pipe.
9. Insulations and gaskets
   a. Visually inspect the following gaskets: flue outlet, blower, burner, and burner door.

D. Restarting after Prolong Shutdown

After prolonged shutdown, it is recommended that the steps in "System Start-up" and "Service and Maintenance" in this manual be performed.

E. Troubleshooting

Refer to the troubleshooting section in the Concert Boiler Control manual on how to navigate the Limit String Status screen which shows an active safety limit status and for an in-depth guide to all the possible lockouts as well as recommended corrective actions to restore operation.

⚠ WARNING

Operating this appliance with a cracked, dented, or otherwise damaged burner, may cause flashback or further damage to the pressure vessel. Replace damaged burners immediately.

APPENDIX A: Tables

I. Hazard Definitions 4

II. Read Before Proceeding 5

III. Product Rating, Specifications, and Dimensional Data 7

Table 1: Performance Ratings 7

Table 2: Boiler Specifications 7

Table 3: Product Dimensions 8

IV. Component Identification 10

V. Unpacking From Shipping Pallet 13

VI. Pre-Installation and Mounting 14

Table 4: Corrosive Combustion Air Contaminants 15

Table 5: Clearances for Serviceability 16

VII. Venting 17

Table 6: Vent and Combustion Air Pipe Diameters and Maximum Lengths 18

Table 7: Equivalent lengths of Vent and Combustion Air Components 19

Table 8: Vent and Combustion Air Equivalent Length Calculation Worksheet 19

Table 9: Flue Gas and Combustion Air Flow Rates 19

Table 10: Listed Vent Manufacturers and Materials 19

Table 11: Stainless Steel and CPVC Vent Adapters 20

Table 12: Polypropylene Vent Adapters 20

Table 13: Stainless Steel Vent and Intake Terminations 20

Table 14: Polypropylene Vent and Intake Terminations 20

Table 15: Recommended Venting Configurations and Material Options 21

Table 16: Direct Vent Terminal Clearances 23

Table 17: Other than Direct Vent Terminal Clearances 24

Table 18: Table of Acceptable Terminations 25

VIII. Condensate Disposal 35

Table 19: Maximum Condensate Flow 35

Table 20: Condensate Neutralizer Kit 36

IX. Hydronic Piping 37

Table 21: Temperature rise, flow rate, and head loss 38

Table 22: Corrosion/Scale Inhibitors and Removal Agents 42

Table 23: Water Treatment Types 42

Table 25: Flow Rates for Glycol Systems 42

Table 24: Absolute Water Flow Rates 42

X. Heating Boiler Piping diagrams 43

XI. Hot Water Supply Boiler Water Piping 47

Table 26: Approximate Time for Scalding 49

Table 27: Operating Water Flow Rates 49

Table 28: Water Quality Requirements 50

Table 29: Temperature Rise, Flow Rate, and Head Loss 50

Table 30: Pumps, Pipe Size, and Total Head Loss 51

Table 31: Required Common Piping Sizes for Multiple Appliances 55

XII. Gas Piping 57

Table 32: Maximum capacity of schedule 40 black pipe in CFH* 58

Table 33: Equivalent Lengths of Standard Pipe Fittings & Valves (ft) 58

Table 34: Specific Gravity Correction Factors 59

Table 35: Inlet Gas Pressures and Pipe Size 59

XIII. Electrical 60

Table 36: Electrical Ratings 60

Table 37: PCB's 61

XIV. System Start-up 66

Table 38: Combustion O_2/CO_2 Levels 68

Table 39: Approximate Throttle Screw Position for Gas Types 69

Table 40: Safety Device Test 70

XV. Service and Maintenance 71

APPENDIX B: Figures

I. Hazard Definitions	**4**
II. Read Before Proceeding	**5**
III. Product Rating, Specifications, and Dimensional Data	**7**
Figure 1: Boiler Dimensions	9
IV. Component Identification	**10**
Figure 2: Component Identification	11
Figure 3: Component Identification	12
V. Unpacking From Shipping Pallet	**13**
Figure 4: Lifting Lugs	13
VI. Pre-Installation and Mounting	**14**
VII. Venting	**17**
Figure 5: Vent Terminal Clearances	22
Figure 6: Horizontal Sidewall Termination	27
Figure 8: Flat Roof Vent Terminations	27
Figure 7: Slopped Roof Termination	27
Figure 9: Multiple Appliance Direct Vent Termination	29
Figure 10: Flexible Vent in Masonry Chimney with Separate Combustion Air Intake	31
VIII. Condensate Disposal	**35**
Figure 11: Condensate Trap Assembly	35
IX. Hydronic Piping	**37**
Figure 12: Factory Supplied Water Manifold	37
X. Heating Boiler Piping diagrams	**43**
Figure 13: Single Boiler, Primary/Secondary Piping	43
Figure 14: Multiple Boiler, Primary/Secondary with Common Header Piping	44
Figure 15: Multiple Boiler, Primary Reverse-Return Piping	45
Figure 16: Single Boiler, Variable Primary Piping	45
Figure 17: Multiple Boiler, Primary Secondary Piping with Hydronic Separator	46
Figure 18: Single Boiler with Indirect Domestic Hot Water Heating	46
XI. Hot Water Supply Boiler Water Piping	**47**
Figure 19: Hot Water Outlet Manifold (W)	47
Figure 20: Single Appliance, Single Tank	52
Figure 21: Two Temperatures, Single Appliance, Single Tank	53
Figure 22: Single Appliance, Two Tanks	54
Figure 23: Two Appliances, Single Tank	55
Figure 24: Two Appliances, Two Tanks	56
XII. Gas Piping	**57**
Figure 25: Gas Train Components	57
Figure 26: High/Low Gas Pressure Switch	59
XIII. Electrical	**60**
Figure 27: Single Phase Wire Diagram	62
Figure 28: Three Phase Wire Diagram	63
XIV. System Start-up	**66**
Figure 29: Operating Instructions	67
Figure 30: Gas Valve Air/Fuel Adjustment	68
XV. Service and Maintenance	**71**
Figure 31: Igniter Electrode Assembly	73
Figure 32: Igniter Electrode Gap	73
Figure 33: UV Scanner Assembly	74
Figure 34: Burner Door Opening	74

APPENDIX C: Default Light-off and Modulation Rates

Parameter	Model							
	1000	**1250**	**1500**	**2000**	**2500**	**3000**	**3500**	**4000**
Max Power MBTU	1000	1250	1500	2000	2500	3000	3500	4000
CH/DHW Max. Modulation Rate (RPM)[1]	6200	7600	4600	4800	4500	5500	6200	6400
Minimum Modulation Rate (RPM)	1725	2000	1250	1350	1250	1400	1600	1700
Light-off (RPM)[1]	2400	2400	1900	1900	1900	2400	2400	2400
Maximum Light-off (RPM)	2500	2500	2000	2000	2000	2500	2500	2500
Minimum Light-off (RPM)	2300	2300	1800	1800	1800	2300	2300	2300

[1] Factory Default RPM
NOTE: To maintain rate in maximum vent length application, contact factory for assistance.

A. Dual Gas: General

1. The dual Gas construction allows for two gases (natural gas and propane gas) to be connected to the appliance at one time which allows for quick changeovers of fuel type.

B. Connecting Gas Supply Line

1. This Appliance has two supply gas connections. Ensure the supply gas lines are connected to the appropriate gas train on the appliance. The propane connection is closest to the front of the appliance labeled LP/Propane.
2. Failure to prevent the gas line from turning could damage gas line components: blower and gas valve.

C. Dual Gas Components

1. **Gas Selection Switch** (Natural/Propane Switch)
   a. Switches operation from one gas valve to the other. Used to choose between natural or propane gas as fuel.
2. **Natural Gas Valve**
   a. Regulates the flow of natural gas into the pre-mix burner by sensing negative pressure from the blower.
3. **Propane Gas Valve**
   a. Regulates the flow of propane gas into the pre-mix burner by sensing negative pressure from the blower.
4. **High Gas Pressure Switches**
   a. The high gas pressure switches monitor the supply gas pressure and shut off the electrical control circuit when pressure rises above the setpoint. Each gas train has one high gas pressure switch.
5. **Low Gas Pressure Switches**
   a. The low gas pressure switches monitor the supply gas pressure and shut off the electrical control circuit if the pressure drops below the setpoint. Each gas train has one low gas pressure switch.

D. Gas Selection

1. The Dual Gas Model features a gas selection (Natural/Propane) switch that electrically separates the two gas valves.
2. The Natural/Propane switch is a heavy duty hesitation switch that allows for easy and safe changeovers of fuel.

E. Electrical Operation

1. The Gas selection switch on NATURAL
   a. The boiler control will receive signals from the natural gas pressure switches only, and send power to the natural gas valve.
2. The Gas selection switch on PROPANE
   a. The boiler control will receive signals from the propane gas pressure switches only and send power to the propane gas valve.

F. Changing Gas Type During Operation

1. Turn off power to the burner. (set ON/OFF switch to OFF)
   a. Switching the gas without turning off power will cause a hard lockout and require a manual reset.
2. Flip the gas selection switch to the desired gas type. (PROPANE/NATURAL)
3. Turn on power to the burner. (set ON/OFF switch to ON)
   a. If the appliance locks out on gas pressure switches, the switches and the control will need to be manually reset.

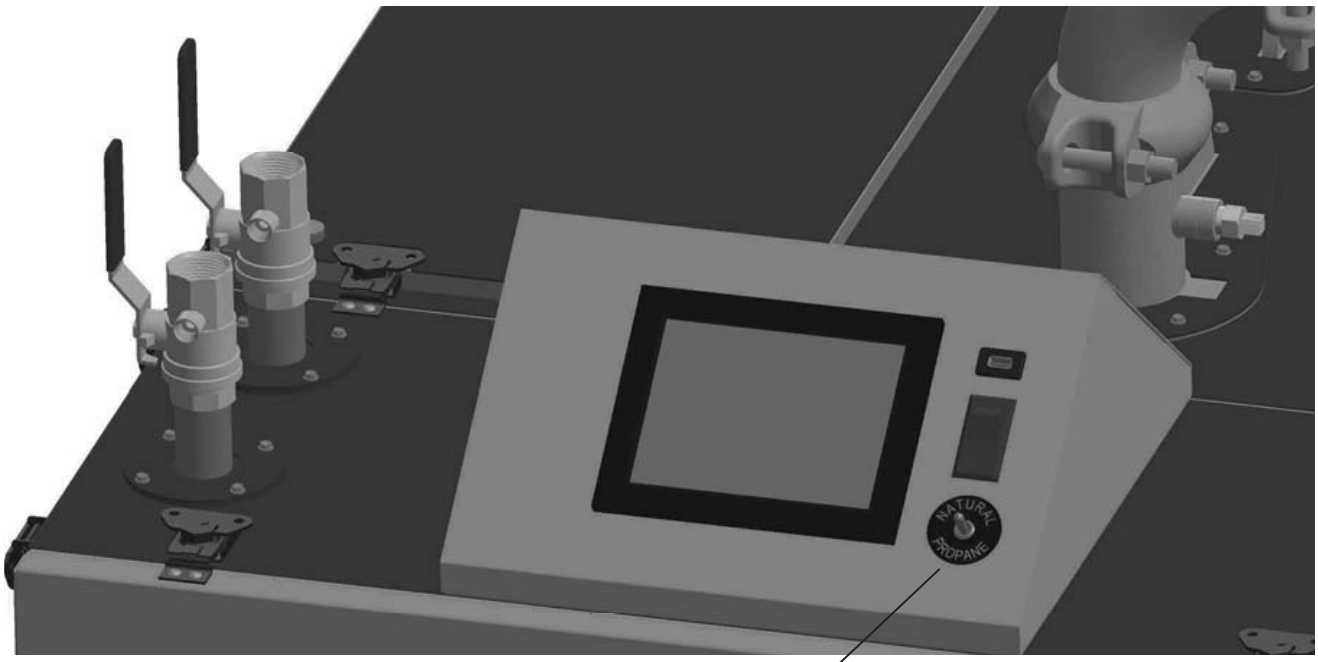

Gas Selection Switch

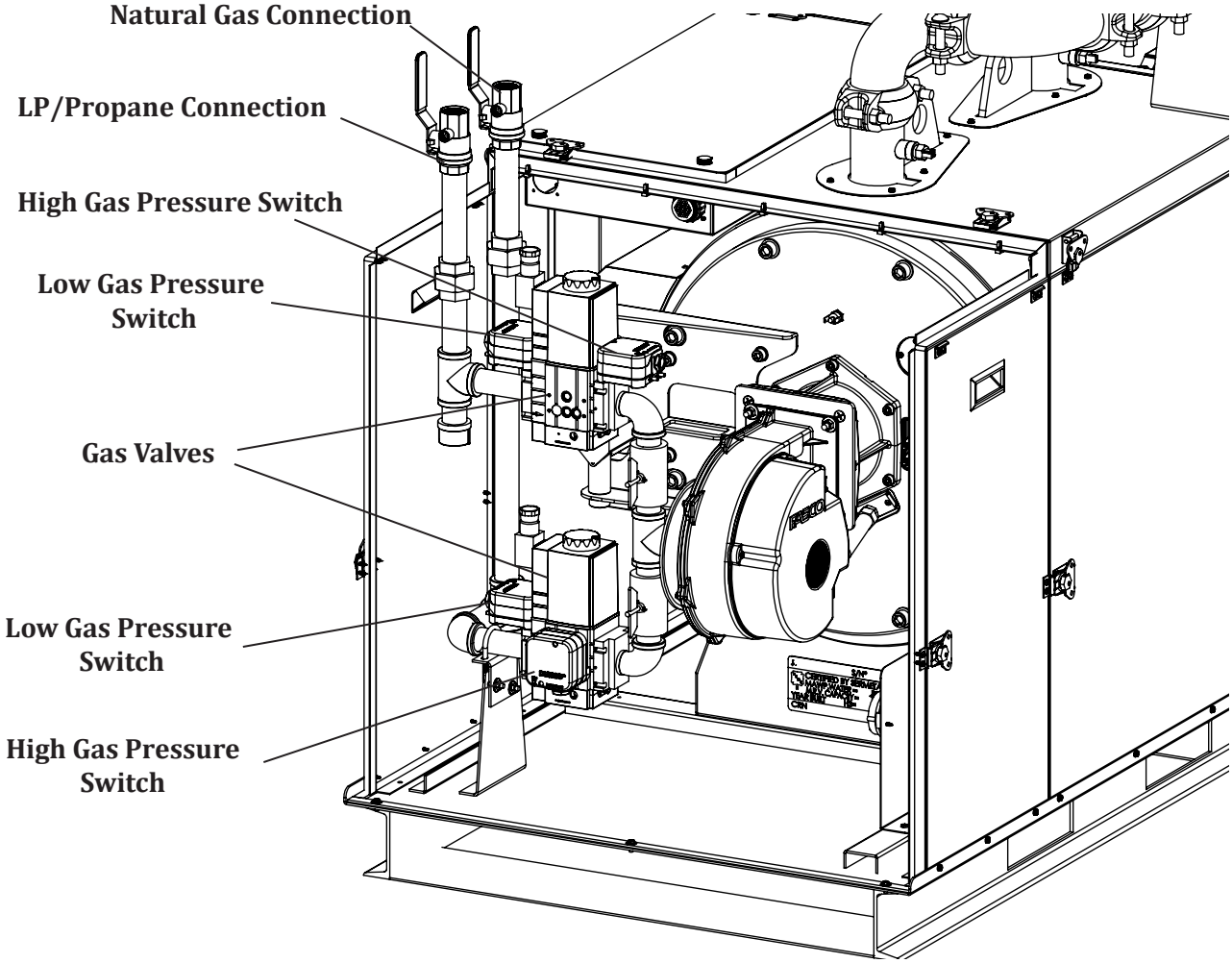

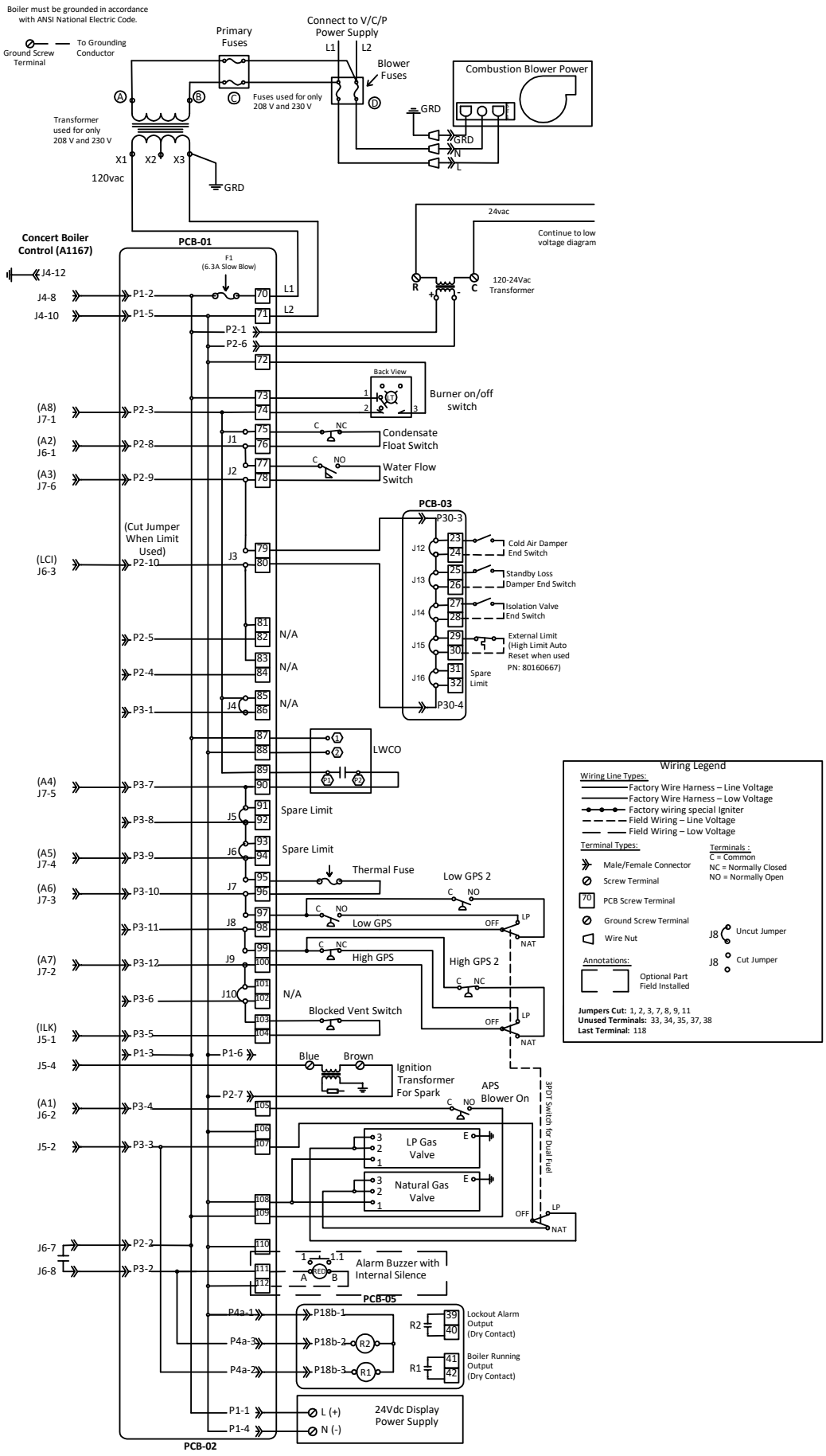

Dual Gas Single Phase Wire Diagram

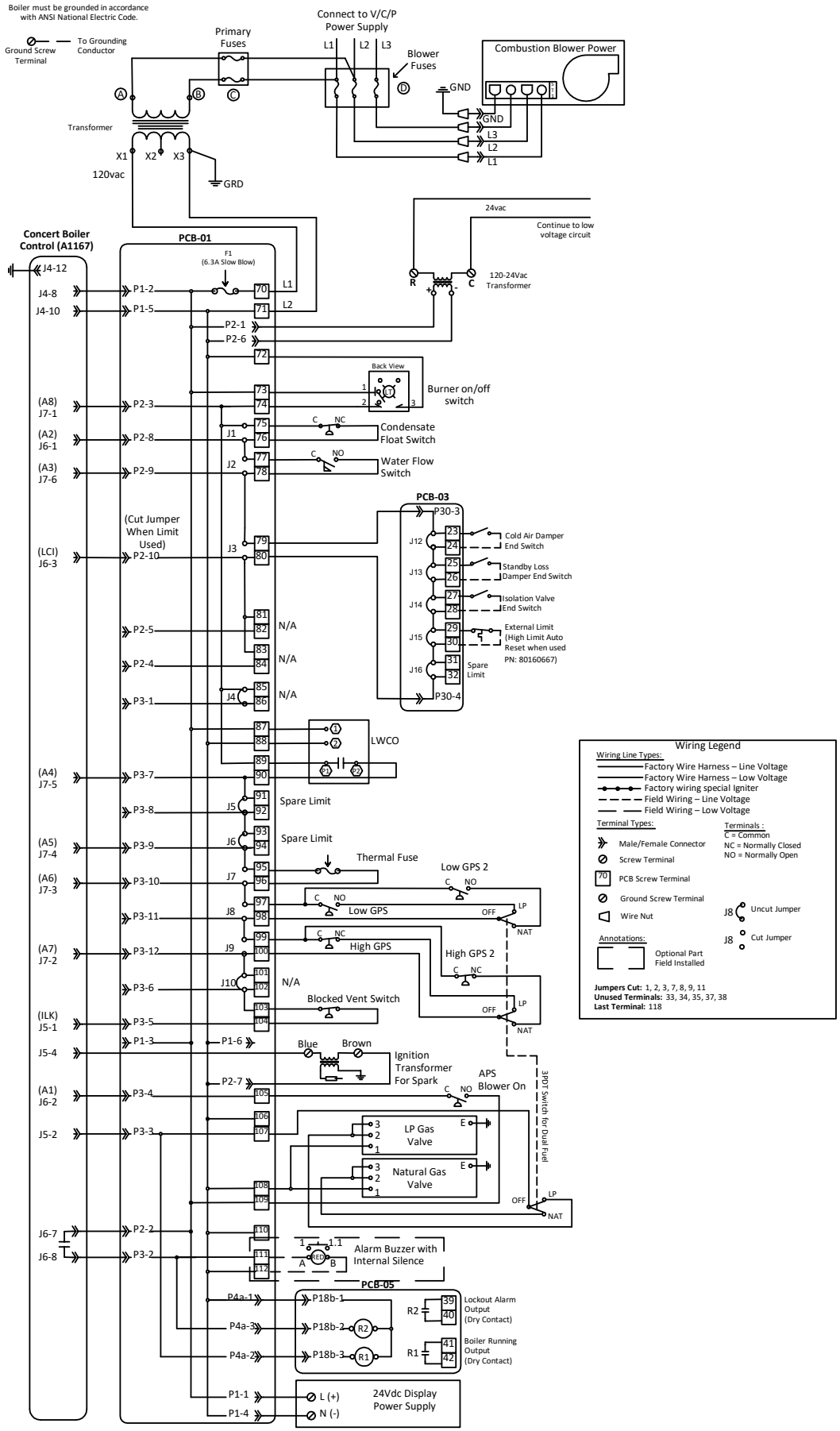

Dual Gas Three Phase Wire Diagram

LIMITED WARRANTY FOR AMP COMMERCIAL CONDENSING BOILERS

Stainless Steel Heat Exchangers and Parts/Accessories

Subject to the terms and conditions set forth below, Thermal Solutions, Lancaster, Pennsylvania hereby extends the following limited warranties to the original owner of a commercial grade water boiler or Thermal Solutions supplied parts and/or accessories manufactured and shipped on or after June 1, 2019:

One Year Limited Warranty On Commercial Boilers and Parts / Accessories Supplied by Thermal Solutions

Thermal Solutions warrants to the original owner that its commercial grade stainless steel water boilers and parts/accessories comply at the time of manufacture with recognized hydronic industry standards and requirements then in effect and will be free of defects in material and workmanship under normal usage for a period of one year from the date shipment. If any part of a commercial grade boiler or any part or accessory provided by Thermal Solutions is found to be defective in material or workmanship during this one year period, Thermal Solutions will, at its option, repair or replace the defective part (not including labor).

Ten Year Heat Exchanger Warranty

Thermal Solutions warrants to the original owner that the heat exchanger of its commercial grade stainless steel boilers will remain free from defects in material, workmanship and thermal shock under normal usage per the product's installation and operation manual for the time period specified in the chart below to the original owner at the original place of installation. If a claim is made under this warranty during the "No Charge" period from the date of shipment, Thermal Solutions will, at its option, repair or replace the heat exchanger (not including labor). If a claim is made under this warranty after the expiration of the "No Charge" period from the date of shipment, Thermal Solutions will, at its option and upon payment of the pro-rated service charge set forth below, repair or replace the heat exchanger. The service charge applicable to a heat exchanger warranty claim is based upon the number of years the heat exchanger has been in service and will be determined as a percentage of the retail price of the heat exchanger model involved at the time the warranty claim is made as follows:

NOTE: If the heat exchanger involved is no longer available due to product obsolescence or redesign, the value used to establish the retail price will be the published price as set forth in Thermal Solutions Repair Parts Pricing where the heat exchanger last appeared or the current retail price of the then nearest equivalent heat exchanger, whichever is greater.

Ten Year Pressure Vessel Shell Warranty

Thermal Solutions warrants to the original owner that the pressure vessel shell assembly of its commercial grade stainless steel boilers will remain free from defects in material and workmanship under normal usage for the time period specified in the chart below to the original owner at the original place of installation. If a claim is made under this warranty during the "No Charge" period from the date of shipment, Thermal Solutions will, at its option, repair or replace the pressure vessel (not including labor). If a claim is made under this warranty after the expiration of the "No Charge" period from the date of shipment, Thermal Solutions will, at its option, repair or replace the pressure vessel.

NOTE: If the pressure vessel involved is no longer available due to product obsolescence or redesign, the value used to establish the retail price will be the published price as set forth in Thermal Solutions Repair Parts Pricing where the heat exchanger last appeared or the current retail price of the then nearest equivalent heat exchanger, whichever is greater.

Service Charge as a % of Retail Price										
Years of Service	1	2	3	4	5	6	7	8	9	10
Heat Exchanger	NO CHARGE					20	40	60	80	100
Pressure Vessel Shell	NO CHARGE									

ADDITIONAL TERMS AND CONDITIONS

1. Applicability: The limited warranties set forth above are extended only to the original owner at the original place of installation within the United States and Canada. These warranties are applicable only to boilers, parts, or accessories designated as commercial grade by Thermal Solutions and installed and used exclusively for purposes of commercial space heating or domestic hot water generation through a heat exchanger (or a combination for such purposes) and do not apply to residential grade products or industrial uses.
2. Components Manufactured by Others: Upon expiration of the one year limited warranty on commercial grade boilers, all boiler components other than heat exchangers manufactured by others but furnished by Thermal Solutions (such as circulator and controls) will be subject only to the manufacturer's warranty, if any.
3. Proper Installation: The warranties extended by Thermal Solutions are conditioned upon the installation of the commercial grade boiler, parts, and accessories in strict compliance with Thermal Solutions installation instructions. Thermal Solutions specifically disclaims liability of any kind caused by or relating to improper installation.
4. Proper Use and Maintenance: The warranties extended by Thermal Solutions conditioned upon the use of the commercial grade boiler, parts, and accessories for its intended purposes and its maintenance accordance with Thermal Solutions recommendations and hydronics industry standards. For proper installation, use and maintenance, see all applicable sections of the Installation and Operating, and Service Instructions Manual furnished with the unit.
5. This warranty does not cover the following:

a. Expenses for removal or re-installation. The owner will be responsible for the cost of removing and reinstalling the alleged defective part or its replacement and all labor and material connected therewith.

a. Expenses for shipping and handling. The owner will be responsible for the cost of transportation and handling to and from Thermal Solutions. Alleged defective part must be returned to factory for warranty determination unless authorized in writing otherwise.

b. Components that are part of the heating system but were not furnished by Thermal Solutions as part of the commercial boiler.

c. Improper burner set-up or adjustment, control settings, care or maintenance.

d. This warranty cannot be considered as a guarantee of workmanship of an installer connected with the installation of the Thermal Solutions boiler, or as imposing on Thermal Solutions liability of any nature for unsatisfactory performance as a result of faulty workmanship in the installation, which liability is expressly disclaimed.

e. Boilers, parts, or accessories installed outside the 48 contiguous United States, the State of Alaska and Canada.

f. Damage to the boiler and/or property due to installation or operation of the boiler that is not in accordance with the boiler installation and operating instruction manual.

i. Any damage or failure of the boiler resulting from hard water, scale buildup or corrosion the heat exchanger. Any damage caused by improper fuels, fuel additives or contaminated combustion air that may cause fireside corrosion and/or c logging of the burner or heat exchanger.

j. Any damage resulting from combustion air contaminated with particulate which cause clogging of the burner or combustion chamber including but not limited to sheetrock or plasterboard particles, dirt, and dust particulate. Any damage, defects or malfunctions resulting from improper operation, maintenance, misuse, abuse, accident, negligence including but not limited to operation with insufficient water flow, improper water level, improper water chemistry, or damage from freezing.

k. Any damage caused by water side clogging due to dirty systems, corrosion products from the system, or improperly maintained water conditions.

Thermal Solutions Product, LLC
Lancaster, PA 17604-3244
Phone: 717-239-7642
orders@thermalsolutions.com
www.thermalsolutions.com